Archiline_W RGBW

Wandleuchten - Lineare Elemente | 220-240 V
48 x powerLEDs 52.8 W DC - 58 W AC | RGBW - 3000
92078V60

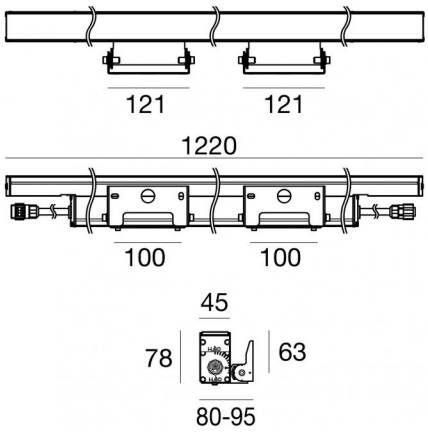

Technische Daten	
Typ	Wandleuchten - Oberfläche
Installationsposition	Wand
Installationsumgebung	Outdoor
Lichtquelle	LED
Circuit structure	powerLEDs
Optik	Medium Flood
Light emission direction	upward
Lampe Nennleistung	52.8 W DC
Gesamtleistung	58 W
Lichtstrom (Lichtquelle)	4140 lm
Nominale Eingangsspannung	220 - 240 V AC
Eingangsspannungsbereich	220 - 240 V AC
Frequency	50 - 60 Hz
Ähnlichste Farbtemperatur / Tone	RGBW - 3000 K
Gleichstrom/Gleichspannung	AC
Isolierklasse	1
IP	IP67
IK	IK10
Glühdrahtprüfung	850°
Direkte Montage auf normal entflammbaren Oberflächen	Ja
CE	Ja
Einschließlich Driver	Control unit/Driver
Leuchte dimmbar	DMX-RDM
Schwenkbarkeit	Orientabile
Gesamtwinkel (horizontale Ebene)	90 °
Drehbarkeit	Nein
Begehbarkeit	Nein
Überrollbarkeit	Nein
Einschließlich Kabel	Ja
Kabellänge	0.2 m
Harzbeschichtung	Nein
Typ Lichtabstrahlung	Einflammig
Nettogewicht	3.5 Kg
Schutz vor elektrostatischen Entladungen	Ja
Schutz vor Stoßspannungen	4 KV
Technische Merkmale des Produkts	TCS - TVS

Oberfläche Oberfläche Gehäuse	
Material	Aluminiumlegierung 6060
Farbe	Anodised aluminium
Bearbeitungstyp	Anodisierung 20 µm

Oberfläche Oberfläche diffusor	
Material	Extra-helles Glas - Gehärtet
Farbe	transparent
Bearbeitungstyp	Siebdruck

Oberfläche Oberfläche bügel	
Material	Edelstahl AISI 316
Farbe	Stahl

Cables Electrification+signal	
Cable connector	ALLinONE Female Socket 6 Pin
IP (locked condition)	67
Cable connector	AllinONE Male Plug 6 Pin
IP (locked condition)	67

Nennlichtstrom für eine einzelne Farbe - RGBW - 3000K				
N. Led	Rot	Grün	Blau	Weiß
48	708 lm	1164 lm	420 lm	1848 lm

Linea Light Group reserves the right, without any advance notice, to change the characteristics of their products, as well as the availability of the same at any time. No product, relative technical data, illustrations and information are binding for Linea Light Group. Linea Light Group will not be held liable for any illustration, text and/or translation\ errors. All values indicated are measured values. There is a +/- 10% tolerance for the flow, CCT and power data.

Archiline_W RGBW

Wandleuchten - Lineare Elemente | 220-240 V | 48 x powerLEDs 52.8 W DC - 58 W AC | RGBW - 3000
92078V60

Single emission wall lights or lines for outdoor application. The RGBW - 3000 K LED light source with a medium flood light distribution is composed of 48 powerled LEDs with CCT of RGB-W 3000 K the source luminous flux is 4140 lm, with a 79.6 lm/W nominal luminous efficacy.

The device body is made of aluminium alloy 6060 and features a anodised aluminium finish, processed by means of 20 µm anodizing; the diffuser is made of extra clear glass - tempered with a silk-screening treatment. Surface treatment of the product body with chemical conversion of aluminum, designed to ensure maximum long?term resistance.

The ingress protection degree is IP67; the total weight is of 3.5 kg.

The total absorbed power is 52.8 W The power supply cable is included and features a 0.2 m length.

The device features protection class I and can be wall lights-mounted.

Compliant with the EN 60598-1 standard and its specific provisions.

Energieeffizienzklasse
Dieses Produkt enthält 12 Lichtquellen der Energieeffizienzklasse D.

Illuminotechnical Eigenschaften	
Light Output Ratio (LOR)	198 %
Lichtstrom (Lichtquelle)	1872 lm
Leuchten Lichtstrom	3723 lm
Consumption	58 W
Leuchten Lichtausbeute	64 lm/W
Farbwiedergabeindex	80 Ra
Standardumgebungstemperatur	-20 / +50°C
Typische Temperatur am Glas	40°C

LED Life / Failure Ratio
L70 B10 C0 247450h

UGR	
UGR axial	17.7
UGR transversal	18
X=4H | Y=8H	S=0.25H
Reflection factor	70/50/20

OPTICAL	
Optik C0/C180	39°
Light distribution simmetry	Symmetrical

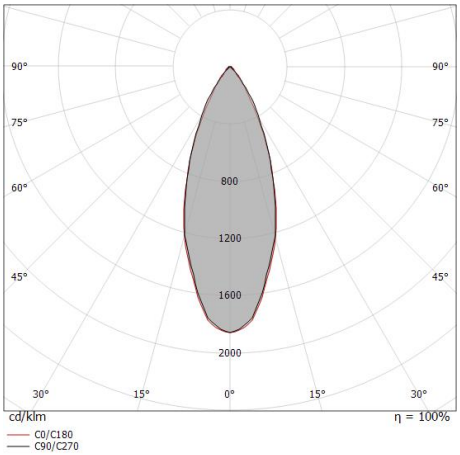

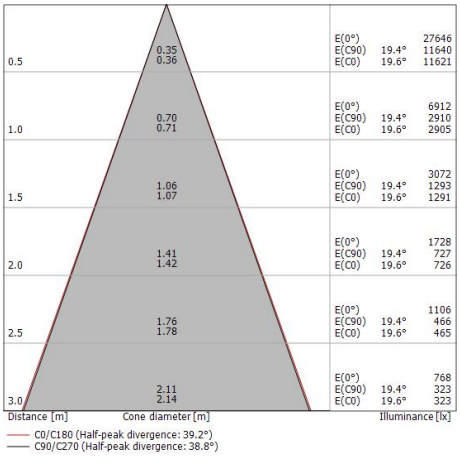

Linea Light Group reserves the right, without any advance notice, to change the characteristics of their products, as well as the availability of the same at any time. No product, relative technical data, illustrations and information are binding for Linea Light Group. Linea Light Group will not be held liable for any illustration, text and/or translation\ errors. All values indicated are measured values. There is a +/- 10% tolerance for the flow, CCT and power data.

Archiline_W RGBW | Lines | Accessories
92078V60

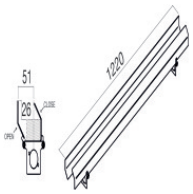

Blendschutz
Material:Aluminium, farbe:Anodised black aluminium, bearbeitungstyp :Eloxierung.

Code
98677

Kabel und Stecker
Typ Kabel power + signal cable allinone; Länge 1000 mm; isolierung doppio con schermatura per segnale; außendurchmesser: 12.6 mm; farben: weiß - blau - rot - grau - braun - gelb-grün.

Code
98660

Kabel und Stecker
Typ Kabel power + signal cable allinone; Länge 5000 mm; isolierung doppio con schermatura per segnale; außendurchmesser: 12.6 mm; farben: weiß - blau - rot - grau - braun - gelb-grün.

Code
98661

Kabel und Stecker
Typ Kabel power + signal cable allinone; Länge 1000 mm; isolierung doppio con schermatura per segnale; außendurchmesser: 12.6 mm.

Code
98662

Kabel und Stecker
Typ Kabel power + signal cable allinone; Länge 5000 mm; isolierung doppio con schermatura per segnale; außendurchmesser: 12.6 mm.

Code
98663

Stecker - Start splitter
Typ Kabel power + signal cable allinone; Länge 5000 + 5000 + 200 mm; isolierung doppio con schermatura per segnale.

Code
98985

Stecker - Continuity splitter
Typ Kabel power + signal cable allinone; Länge 200 + 200 + 5000 mm; isolierung doppio con schermatura per segnale.

Code
99390

Stecker - DMX-Leitungsverschlussadapter für ALLinONE-Kabel
Typ Kabel power + signal cable allinone; ; isolierung doppio con schermatura per segnale.

Code
98986

Linea Light Group reserves the right, without any advance notice, to change the characteristics of their products, as well as the availability of the same at any time. No product, relative technical data, illustrations and information are binding for Linea Light Group. Linea Light Group will not be held liable for any illustration, text and/or translation\ errors. All values indicated are measured values. There is a +/- 10% tolerance for the flow, CCT and power data.