Satori_P

Pendelleuchte | 220-240 V
topLED 25 W DC - 27 W AC | CRI 90
9195M

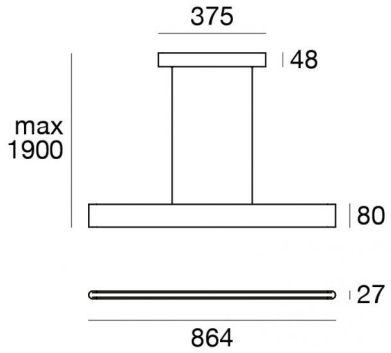

Technische Daten	
Typ	Pendelleuchte
Installationsposition	Decke
Installationsumgebung	Indoor
Lichtquelle	LED
Circuit structure	topLED
Optik	Double Diffused
Light emission direction	downward and upward
Lampe Nennleistung	25 W DC
Gesamtleistung	27 W
Lichtstrom (Lichtquelle)	4218 lm
Nominale Eingangsspannung	220 - 240 V AC
Eingangsspannungsbereich	220 - 240 V AC
Frequency	50 - 60 Hz
Ähnlichste Farbtemperatur / Tone	2700 K
Farbwiedergabeindex	90 Ra
Gleichstrom/Gleichspannung	AC
Isolierklasse	1
IP	IP20
Glühdrahtprüfung	850°
Direkte Montage auf normal entflammbaren Oberflächen	Ja
CE	Ja
Einschließlich Driver	Driver
Leuchte dimmbar	DALI-2 - PUSH DIM
Schwenkbarkeit	Nein
Drehbarkeit	Nein
Begehbarkeit	Nein
Überrollbarkeit	Nein
Einschließlich Kabel	Ja
Kabellänge	2.2 m
Harzbeschichtung	Nein
Typ Lichtabstrahlung	Zweiflammig
Nettogewicht	2.6 Kg
Schutz vor elektrostatischen Entladungen	Ja
Schutz vor Stoßspannungen	Ja

Oberfläche Oberfläche Gehäuse	
Material	Aluminium
Farbe	Text white RAL9003
Bearbeitungstyp	Lackierung

Oberfläche Oberfläche diffusor	
Material	PC
Farbe	Opal

Oberfläche Oberfläche fassung	
Material	Aluminium
Farbe	Text white RAL9003
Bearbeitungstyp	Lackierung

Cables Electrification+suspension	
Max. Kabellänge	2200 mm

Linea Light Group reserves the right, without any advance notice, to change the characteristics of their products, as well as the availability of the same at any time. No product, relative technical data, illustrations and information are binding for Linea Light Group. Linea Light Group will not be held liable for any illustration, text and/or translation\ errors. All values indicated are measured values. There is a +/- 10% tolerance for the flow, CCT and power data.

Pendelleuchte | 220-240 V | topLED 25 W DC - 27 W AC | CRI 90
9195M

Double emission pendant luminaires for indoor application. The super warm white LED light source with a double diffused light distribution is composed of 234 topled LEDs with CCT of 2700 K and a CRI 90; the source luminous flux is 4218 lm, with a 168.7 lm/W nominal luminous efficacy.

The device body is made of aluminium and features a text white ral9003 finish, processed by means of coating; the diffuser is made of PC; the mounting frame is made of aluminium, with a text white ral9003 finish, processed by means of coating.

The ingress protection degree is IP20; the total weight is of 2.6 kg.

The total absorbed power is 27 W The power supply cable is included and features a 2.2 m length.

The device features protection class I and can be ceiling-mounted.

Compliant with the EN 60598-1 standard and its specific provisions.

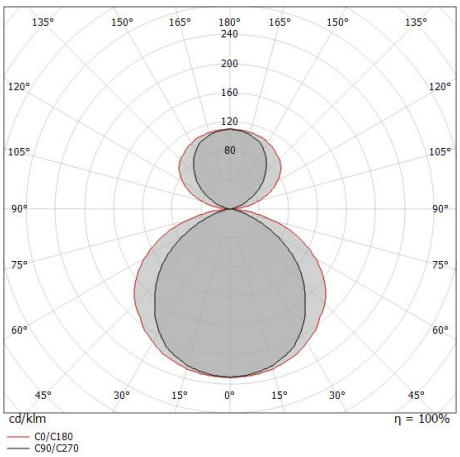

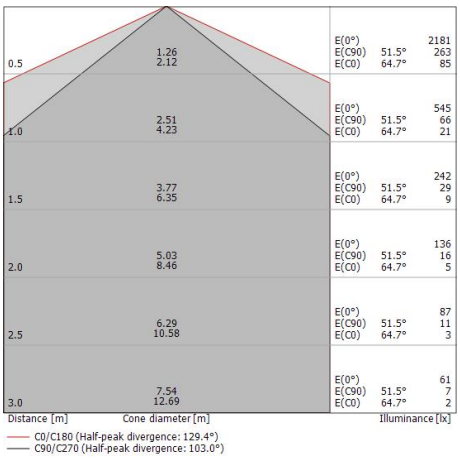

Energieeffizienzklasse
Dieses Produkt enthält 5 Lichtquellen der Energieeffizienzklasse D.

Illuminotechnical Eigenschaften	
Light Output Ratio (LOR)	55 %
Lichtstrom (Lichtquelle)	4218 lm
Leuchten Lichtstrom	2360 lm
Consumption	27 W
Leuchten Lichtausbeute	87 lm/W
Farbtemperatur	2700 K
Standard Deviation of Colour Matching	3 Step MacAdam
Farbwiedergabeindex	90 Ra
Verbindungstemperatur (Leuchte)	80
Standardumgebungstemperatur	25°C

LED Life / Failure Ratio
L70 B10 C0 102000h
L90 B10 C0 55000h

UGR	
UGR axial	21.9
UGR transversal	26.5
X=4H | Y=8H	S=0.25H
Reflection factor	70/50/20

OPTICAL	
Optik C90/C270	103°
Optik C0/C180	129°
Light distribution simmetry	Symmetrical 2 assis

Linea Light Group reserves the right, without any advance notice, to change the characteristics of their products, as well as the availability of the same at any time. No product, relative technical data, illustrations and information are binding for Linea Light Group. Linea Light Group will not be held liable for any illustration, text and/or translation\ errors. All values indicated are measured values. There is a +/- 10% tolerance for the flow, CCT and power data.