Anton_R

Downlights | 1 x powerLED 2 W DC 630 mA | CRI 80
91896N08

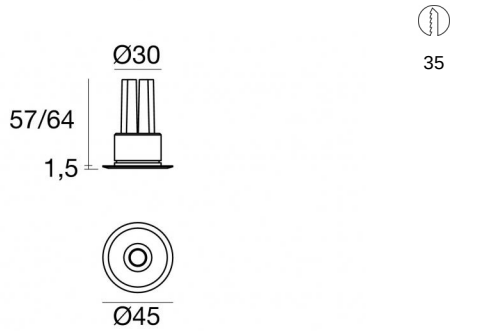

*64mm with 8° optic

Technische Daten	
Installationsposition	Decke
Installationsumgebung	Indoor
Lichtquelle	LED
Circuit structure	powerLED
Optik	Narrow Spot
Lampe Nennleistung	2 W DC
Lichtstrom (Lichtquelle)	249 lm
Eingangsspannungsbereich	630mA
Ähnlichste Farbtemperatur / Tone	4000 K
Farbwiedergabeindex	80 Ra
Gleichstrom/Gleichspannung	CC
Isolierklasse	3
IP	IP45
Glühdrahtprüfung	850°
Direkte Montage auf normal entflammbaren Oberflächen	Ja
CE	Ja
Einschließlich Driver	Nein
Leuchte dimmbar	DALI - 1-10V
Schwenkbarkeit	Nein
Drehbarkeit	Nein
Begehbarkeit	Nein
Überrollbarkeit	Nein
Einschließlich Kabel	Ja
Kabellänge	0.12 m
Harzbeschichtung	Nein
Typ Lichtabstrahlung	Einflammig
Nettogewicht	0.070 Kg
Schutz vor elektrostatischen Entladungen	Nein
Schutz vor Stoßspannungen	Nein

Oberfläche Oberfläche Gehäuse	
Material	Aluminium
Farbe	Weiß RAL 9010
Bearbeitungstyp	Lackierung

Elektronik

89147
On/Off Driver 198~264V AC / 180~275V DC

99105
On/Off Driver 198~264V AC

99376
On/Off Driver 198~264V AC

Linea Light Group reserves the right, without any advance notice, to change the characteristics of their products, as well as the availability of the same at any time. No product, relative technical data, illustrations and information are binding for Linea Light Group. Linea Light Group will not be held liable for any illustration, text and/or translation\ errors. All values indicated are measured values. There is a +/- 10% tolerance for the flow, CCT and power data.

Downlights | 1 x powerLED 2 W DC 630 mA | CRI 80
91896N08

Single emission recessed downlights for indoor application. The natural white LED light source with a narrow spot light distribution is composed of 1 powerled LEDs with CCT of 4000 K and a CRI 80; the source luminous flux is 249 lm, with a 124.5 lm/W nominal luminous efficacy.

The device body is made of aluminium and features a white ral 9010 finish, processed by means of coating.

The ingress protection degree is IP45; the total weight is of 0.070 kg. The power supply driver is not provided and is to be ordered separately.

The total absorbed power is 2 W The power supply cable is included and features a 0.12 m length.

The device features protection class III and can be ceiling-mounted, with a 35 mm diameter hole (in plasterboard).

Compliant with the EN 60598-1 standard and its specific provisions.

Energieeffizienzklasse
Dieses Produkt enthält eine Lichtquelle der Energieeffizienzklasse D.

Illuminotechnical Eigenschaften	
Light Output Ratio (LOR)	65 %
Lichtstrom (Lichtquelle)	249 lm
Leuchten Lichtstrom	164 lm
Consumption	2,0 W
Leuchten Lichtausbeute	82 lm/W
Farbtemperatur	4000 K
Standard Deviation of Colour Matching	1.5 Step
Farbwiedergabeindex	80 Ra
Standardumgebungstemperatur	-20 / +50°C

LED Life / Failure Ratio
L70 B10 C0 1240219h (at Tj 65 Ta 25)
L80 B10 C0 745627h (at Tj 65 Ta 25)
L90 B10 C0 309367h (at Tj 65 Ta 25)

UGR	
UGR axial	23
UGR transversal	23
X=4H | Y=8H	S=0.25H
Reflection factor	70/50/20

OPTICAL	
Optik C0/C180	8°
Light distribution simmetry	Symmetrical

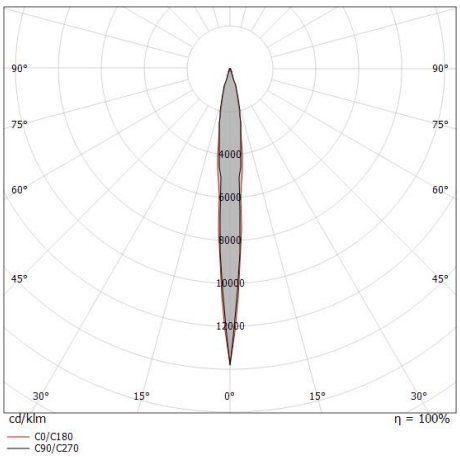

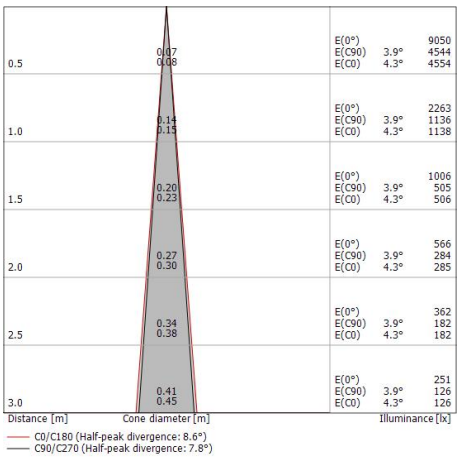

Linea Light Group reserves the right, without any advance notice, to change the characteristics of their products, as well as the availability of the same at any time. No product, relative technical data, illustrations and information are binding for Linea Light Group. Linea Light Group will not be held liable for any illustration, text and/or translation\ errors. All values indicated are measured values. There is a +/- 10% tolerance for the flow, CCT and power data.