Downlights | 1 arrayLED 12.5 W DC 350 mA | CRI 90
91749N15

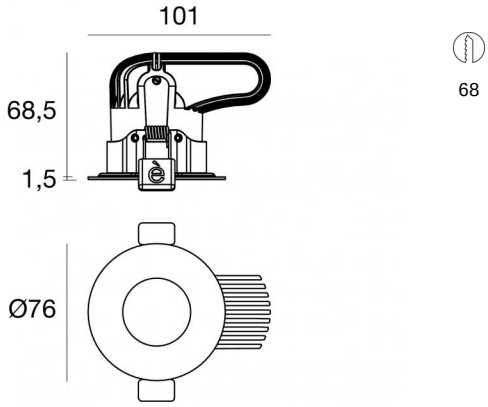

Technische Daten	
Installationsposition	Decke
Installationsumgebung	Indoor
Lichtquelle	LED
Circuit structure	arrayLED
Optik	Spot
Light emission direction	downward
Lampe Nennleistung	12.5 W DC
Lichtstrom (Lichtquelle)	1736 lm
Eingangsspannungsbereich	350mA
Ähnlichste Farbtemperatur / Tone	4000 K
Farbwiedergabeindex	90 Ra
Gleichstrom/Gleichspannung	CC
Isolierklasse	3
IP	IP44
IP optisches System	IP65
IK	IK08
Glühdrahtprüfung	850°
Direkte Montage auf normal entflammbaren Oberflächen	Ja
CE	Ja
Einschließlich Driver	Nein
Leuchte dimmbar	DALI - 1-10V
Schwenkbarkeit	Nein
Drehbarkeit	Nein
Begehbarkeit	Nein
Überrollbarkeit	Nein
Einschließlich Kabel	Ja
Kabellänge	0.300 m
Harzbeschichtung	Nein
Einbautiefe	68.5 mm
Typ Lichtabstrahlung	Einflammig
Nettogewicht	0.26 Kg
Schutz vor elektrostatischen Entladungen	Nein
Schutz vor Stoßspannungen	Nein

Oberfläche Oberfläche Gehäuse	
Material	Stranggepresstes Aluminium EN AB - 46100
Farbe	Text white RAL9003
Bearbeitungstyp	Pulverbeschichtung mit duroplastischen Pulvern

Oberfläche Oberfläche diffusor	
Material	UV beständiges Polycarbonat
Farbe	Transparent

Oberfläche Oberfläche strahler	
Material	Stranggepresstes Aluminium EN AB - 46100
Farbe	Aluminium
Bearbeitungstyp	Polieren

Elektronik

99115
1-10V - N/O button Multi Power 198~264V AC / V DC (1 art.)

99375
On/Off Driver 198~264V AC (1 art.)

83322
Push and Simply Dim - DALI-2 Controller (1 art.)

Cables Electrification	
Cable connector	MALE JST SMR-02V-B
Cable connector	FEMALE JST SMR-02V-BC

Linea Light Group reserves the right, without any advance notice, to change the characteristics of their products, as well as the availability of the same at any time. No product, relative technical data, illustrations and information are binding for Linea Light Group. Linea Light Group will not be held liable for any illustration, text and/or translation\ errors. All values indicated are measured values. There is a +/- 10% tolerance for the flow, CCT and power data.

Downlights | 1 arrayLED 12.5 W DC 350 mA | CRI 90
91749N15

Single emission recessed downlights for indoor application. The natural white LED light source with a spot light distribution is composed of 1 arrayled LEDs with CCT of 4000 K and a CRI 90; the source luminous flux is 1736 lm, with a 138.9 lm/W nominal luminous efficacy.

The device body is made of die-cast aluminium en ab - 46100 and features a text white ral9003 finish, processed by means of powder coating with thermosetting powders; the diffuser is made of uv resistant polycarbonate.

The ingress protection degree is IP44; the total weight is of 0.26 kg. The power supply driver is not provided and is to be ordered separately.

The total absorbed power is 12.5 W The power supply cable is included and features a 0.300 m length.

The device features protection class III and can be ceiling-mounted, with a 68 mm diameter hole (in plasterboard).

Compliant with the EN 60598-1 standard and its specific provisions.

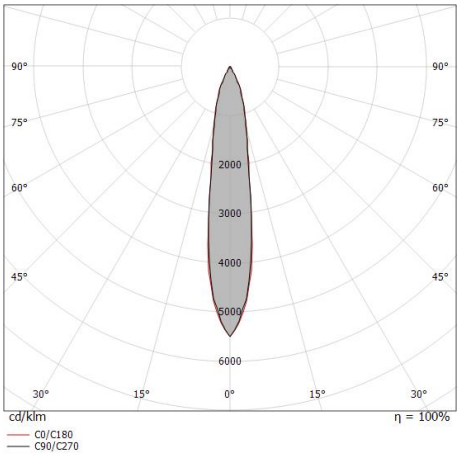

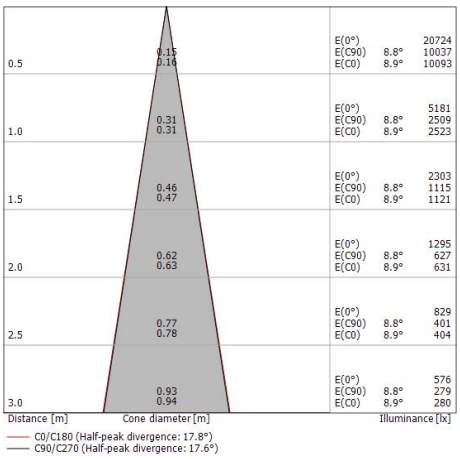

Energieeffizienzklasse
Dieses Produkt enthält eine Lichtquelle der Energieeffizienzklasse D.

Illuminotechnical Eigenschaften	
Light Output Ratio (LOR)	54 %
Lichtstrom (Lichtquelle)	1736 lm
Leuchten Lichtstrom	942 lm
Consumption	8 W
Leuchten Lichtausbeute	117 lm/W
Farbtemperatur	4000 K
Standard Deviation of Colour Matching	2 Step MacAdam
Farbwiedergabeindex	90 Ra
Standardumgebungstemperatur	-20 / +50°C
Typische Temperatur am Glas	40°C

LED Life / Failure Ratio
L70 B10 C0 211958h (at Tj 65 Ta 25)
L80 B10 C0 132729h (at Tj 65 Ta 25)
L90 B10 C0 62845h (at Tj 65 Ta 25)

UGR	
UGR axial	15.2
UGR transversal	15.1
X=4H | Y=8H	S=0.25H
Reflection factor	70/50/20

OPTICAL	
Optik C0/C180	18°
Light distribution simmetry	Symmetrical

Linea Light Group reserves the right, without any advance notice, to change the characteristics of their products, as well as the availability of the same at any time. No product, relative technical data, illustrations and information are binding for Linea Light Group. Linea Light Group will not be held liable for any illustration, text and/or translation\ errors. All values indicated are measured values. There is a +/- 10% tolerance for the flow, CCT and power data.

Downlights | 1 arrayLED 12.5 W DC 350 mA | CRI 90

91749N15

Single emission recessed downlights for indoor application. The natural white LED light source with a spot light distribution is composed of 1 arrayled LEDs with CCT of 4000 K and a CRI 90; the source luminous flux is 1736 lm, with a 138.9 lm/W nominal luminous efficacy.

The device body is made of die-cast aluminium en ab - 46100 and features a text white ral9003 finish, processed by means of powder coating with thermosetting powders; the diffuser is made of uv resistant polycarbonate.

The ingress protection degree is IP44; the total weight is of 0.26 kg. The power supply driver is not provided and is to be ordered separately.

The total absorbed power is 12.5 W The power supply cable is included and features a 0.300 m length.

The device features protection class III and can be ceiling-mounted, with a 68 mm diameter hole (in plasterboard).

Compliant with the EN 60598-1 standard and its specific provisions.

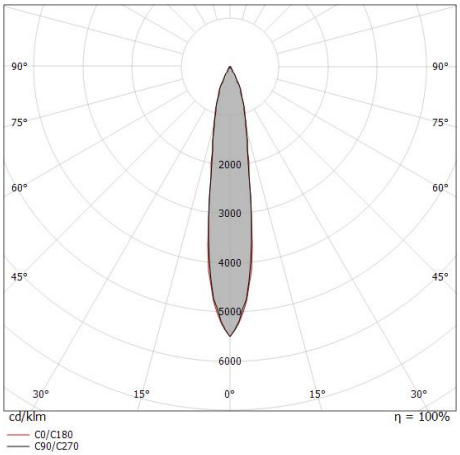

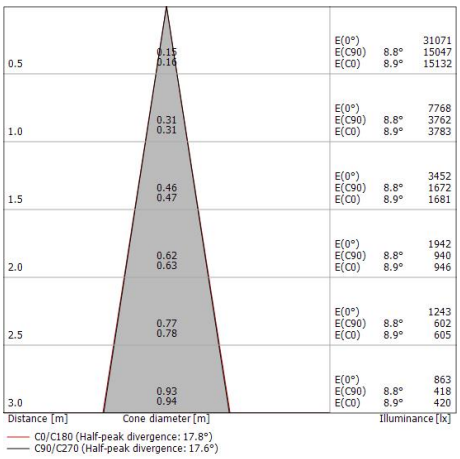

Energieeffizienzklasse
Dieses Produkt enthält eine Lichtquelle der Energieeffizienzklasse D.

Illuminotechnical Eigenschaften	
Light Output Ratio (LOR)	81 %
Lichtstrom (Lichtquelle)	1736 lm
Leuchten Lichtstrom	1412 lm
Consumption	13 W
Leuchten Lichtausbeute	108 lm/W
Farbtemperatur	4000 K
Standard Deviation of Colour Matching	2 Step MacAdam
Farbwiedergabeindex	90 Ra
Standardumgebungstemperatur	-20 / +50°C
Typische Temperatur am Glas	40°C

LED Life / Failure Ratio
L70 B10 C0 211958h (at Tj 65 Ta 25)
L80 B10 C0 132729h (at Tj 65 Ta 25)
L90 B10 C0 62845h (at Tj 65 Ta 25)

UGR	
UGR axial	16.6
UGR transversal	16.5
X=4H | Y=8H	S=0.25H
Reflection factor	70/50/20

OPTICAL	
Optik C0/C180	18°
Light distribution simmetry	Symmetrical

Linea Light Group reserves the right, without any advance notice, to change the characteristics of their products, as well as the availability of the same at any time. No product, relative technical data, illustrations and information are binding for Linea Light Group. Linea Light Group will not be held liable for any illustration, text and/or translation\ errors. All values indicated are measured values. There is a +/- 10% tolerance for the flow, CCT and power data.