Prolamp RGBW

Scheinwerfer | 24 x powerLEDs 174 W DC - 188 W AC
RGBW - 3000
90405V30





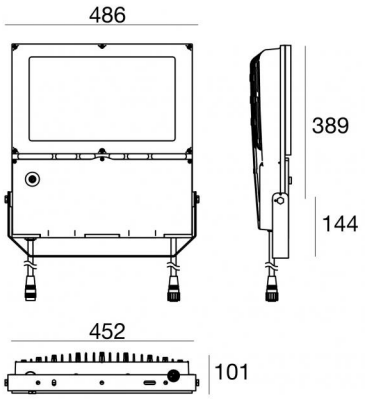

Technische Daten	
Typ	Oberfläche
Installationsposition	Wand - Decke - Boden
Installationsumgebung	Outdoor
Lichtquelle	LED
Circuit structure	powerLEDs
Optik	Medium Flood
Light emission direction	frontal
Lampe Nennleistung	174 W DC
Gesamtleistung	188 W
Nominale Eingangsspannung	220 - 240 V AC
Ähnlichste Farbtemperatur / Tone	RGBW - 3000 K
Gleichstrom/Gleichspannung	AC
Isolierklasse	1
IP	IP66
IK	IK08
Glühdrahtprüfung	850°
Direkte Montage auf normal entflammbaren Oberflächen	Ja
CE	Ja
Einschließlich Driver	Control unit/Driver
Leuchte dimmbar	DMX-RDM
Schwenkbarkeit	Orientabile
Gesamtwinkel (vertikale Ebene)	180 °
Drehbarkeit	Nein
Begehbarkeit	Nein
Überrollbarkeit	Nein
Einschließlich Kabel	Ja
Kabellänge	0.3 m
Harzbeschichtung	Nein
Typ Lichtabstrahlung	Einflammig
Nettogewicht	13.5 Kg
Schutz vor elektrostatischen Entladungen	Ja
Schutz vor Stoßspannungen	4 KV
Technische Merkmale des Produkts	TCS

Oberfläche Oberfläche Gehäuse	
Material	Stranggepresstes Aluminium EN AB - 46100
Farbe	Text brilliant grey RAL 9006
Bearbeitungstyp	Offenporige Anodisierung + Pulverlackierung

Oberfläche Oberfläche diffusor	
Material	Extra-helles Glas - Gehärtet
Farbe	transparent
Bearbeitungstyp	Siebdruck

Oberfläche Oberfläche bügel	
Material	Stahl AISI 304
Farbe	Stahl

Cables Electrification+signal	
IP (locked condition)	67
Cable connector	AllinONE Male Plug 6 Pin

IP (locked condition)	67
Cable connector	ALLinONE Female Socket 6 Pin

Linea Light Group reserves the right, without any advance notice, to change the characteristics of their products, as well as the availability of the same at any time. No product, relative technical data, illustrations and information are binding for Linea Light Group. Linea Light Group will not be held liable for any illustration, text and/or translation\ errors. All values indicated are measured values. There is a +/- 10% tolerance for the flow, CCT and power data.

Scheinwerfer | 24 x powerLEDs 174 W DC - 188 W AC | RGBW - 3000
90405V30

Single emission projectors for outdoor application. The RGBW - 3000 K LED light source with a medium flood light distribution is composed of 24 powerled LEDs.

The device body is made of die-cast aluminium en ab - 46100 and features a text brilliant grey ral 9006 finish, processed by means of open pore anodizing + powder coating; the diffuser is made of extra clear glass - tempered with a silk-screening treatment. Surface treatment of the product body through aluminum chemical conversion, followed by polyester powder coating, using exclusively coatings compliant with the Qualicoat standard.

The ingress protection degree is IP66; the total weight is of 13.5 kg.

The total absorbed power is 174 W The power supply cable is included and features a 0.3 m length.

The device features protection class I and can be wall lights, ceiling or floor-mounted.

Compliant with the EN 60598-1 standard and its specific provisions.

Energieeffizienzklasse
Dieses Produkt enthält eine Lichtquelle der Energieeffizienzklasse G.

Typische Temperatur am Glas	40°C

LED Life / Failure Ratio
L70 B10 C0 202460h (at Tj 60 Ta 25)

Linea Light Group reserves the right, without any advance notice, to change the characteristics of their products, as well as the availability of the same at any time. No product, relative technical data, illustrations and information are binding for Linea Light Group. Linea Light Group will not be held liable for any illustration, text and/or translation\ errors. All values indicated are measured values. There is a +/- 10% tolerance for the flow, CCT and power data.

Prolamp RGBW | Projectors | Accessories
90405V30



Kabel und Stecker
Typ Kabel power + signal cable allinone; Länge 1000 mm; isolierung doppio con schermatura per segnale; außendurchmesser: 12.6 mm; farben: weiß - blau - rot - grau - braun - gelb-grün.

Code
98660



Kabel und Stecker
Typ Kabel power + signal cable allinone; Länge 5000 mm; isolierung doppio con schermatura per segnale; außendurchmesser: 12.6 mm; farben: weiß - blau - rot - grau - braun - gelb-grün.

Code
98661



Kabel und Stecker
Typ Kabel power + signal cable allinone; Länge 1000 mm; isolierung doppio con schermatura per segnale; außendurchmesser: 12.6 mm.

Code
98662



Kabel und Stecker
Typ Kabel power + signal cable allinone; Länge 5000 mm; isolierung doppio con schermatura per segnale; außendurchmesser: 12.6 mm.

Code
98663





Stecker - Start splitter
Typ Kabel power + signal cable allinone; Länge 5000 + 5000 + 200 mm; isolierung doppio con schermatura per segnale.

Code
98985





Stecker - Continuity splitter
Typ Kabel power + signal cable allinone; Länge 200 + 200 + 5000 mm; isolierung doppio con schermatura per segnale.

Code
99390



Stecker - DMX-Leitungsverschlussadapter für ALLinONE-Kabel
Typ Kabel power + signal cable allinone; ; isolierung doppio con schermatura per segnale.

Code
98986

Linea Light Group reserves the right, without any advance notice, to change the characteristics of their products, as well as the availability of the same at any time. No product, relative technical data, illustrations and information are binding for Linea Light Group. Linea Light Group will not be held liable for any illustration, text and/or translation\ errors. All values indicated are measured values. There is a +/- 10% tolerance for the flow, CCT and power data.