Fante

Deckenleuchten | 220-240 V | 1x11W E27

8967





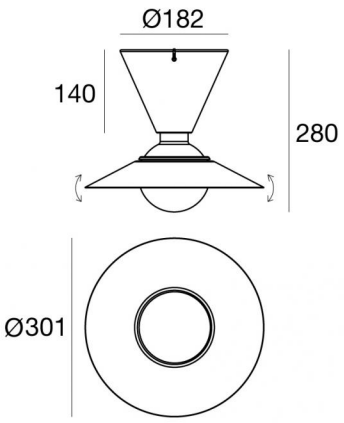

Technische Daten	
Designer	Jonathan De Pas, Donato D'urbino, Paolo Lomazzi
Jahr der Verwirklichung	1978
Typ	Deckenleuchten
Installationsposition	Decke
Installationsumgebung	Indoor
Leuchtmittel inbegriffen	Ja
Anschluss der Leuchte	1 x E27
Light emission direction	downward and upward
Frequency	50-60 Hz
Optik	Diffuses
Isolierklasse	1
IP	IP20
Glühdrahtprüfung	650°
Direkte Montage auf normal entflammbaren Oberflächen	Ja
CE	Ja
Leuchte dimmbar	Nein
Schwenkbarkeit	Nein
Drehbarkeit	Ja
Gesamtwinkel (horizontale Ebene)	90 °
Begehbarkeit	Nein
Überrollbarkeit	Nein
Einschließlich Kabel	Ja
Steckdose	Tipo L
Harzbeschichtung	Nein
Nettogewicht	1.195 Kg

Oberfläche Oberfläche diffusor	
Material	Aluminium
Farbe	Text white RAL9003
Bearbeitungstyp	Lackierung

Linea Light Group reserves the right, without any advance notice, to change the characteristics of their products, as well as the availability of the same at any time. No product, relative technical data, illustrations and information are binding for Linea Light Group. Linea Light Group will not be held liable for any illustration, text and/or translation\ errors. All values indicated are measured values. There is a +/- 10% tolerance for the flow, CCT and power data.

Deckenleuchten | 220-240 V | 1x11W E27
8967

Double emission ceiling downlights for indoor application. LED lamplamp included, lamp cap E27 1x11W.

The diffuser is made of aluminium with a coating treatment.

The ingress protection degree is IP20; the total weight is of 1.195 kg.

The power supply cable is included and features.

The device features protection class I and can be ceiling-mounted.

Compliant with the EN 60598-1 standard and its specific provisions.

Energieeffizienzklasse
Dieses Produkt enthält eine Lichtquelle der Energieeffizienzklasse D.

Illuminotechnical Eigenschaften	
Farbtemperatur	2700 K
Farbwiedergabeindex	80 Ra
Lichtstrom (Lichtquelle)	1 x 1520 lm

Linea Light Group reserves the right, without any advance notice, to change the characteristics of their products, as well as the availability of the same at any time. No product, relative technical data, illustrations and information are binding for Linea Light Group. Linea Light Group will not be held liable for any illustration, text and/or translation\ errors. All values indicated are measured values. There is a +/- 10% tolerance for the flow, CCT and power data.