Demì

Pendelleuchte | 220-240 V
126 topLED 50 W DC - 55 W AC | CRI 90
8891

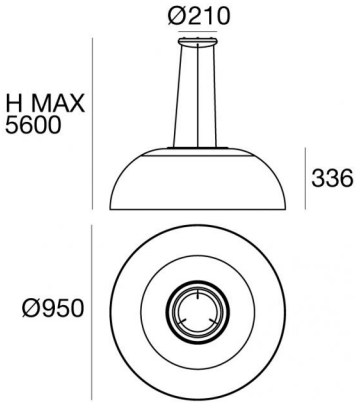

Technische Daten	
Designer	Mirco Crosatto
Jahr der Verwirklichung	2019
Typ	Pendelleuchte
Installationsposition	Decke
Installationsumgebung	Indoor
Lichtquelle	LED
Circuit structure	topLED
Optik	Diffuses
Light emission direction	downward and upward
Lampe Nennleistung	50 W DC
Gesamtleistung	55 W
Lichtstrom (Lichtquelle)	6219 lm
Nominale Eingangsspannung	220 - 240 V AC
Eingangsspannungsbereich	220 - 240 V AC
Frequency	60 - 50 Hz
Ähnlichste Farbtemperatur / Tone	3000 K
Farbwiedergabeindex	90 Ra
Gleichstrom/Gleichspannung	AC
Isolierklasse	1
IP	IP20
Glühdrahtprüfung	650°
Direkte Montage auf normal entflammbaren Oberflächen	Ja
CE	Ja
Einschließlich Driver	Driver
Leuchte dimmbar	DALI-2 - PUSH DIM
Schwenkbarkeit	Nein
Drehbarkeit	Nein
Begehbarkeit	Nein
Überrollbarkeit	Nein
Einschließlich Kabel	Ja
Kabellänge	5.3 m
Harzbeschichtung	Nein
Typ Lichtabstrahlung	Zweiflammig
Nettogewicht	6,51 Kg
Schutz vor elektrostatischen Entladungen	Nein
Schutz vor Stoßspannungen	Nein
Optiktechnologie	Optilight TM

Oberfläche Oberfläche Gehäuse	
Material	Stranggepresstes Aluminium
Farbe	Text white RAL9003
Bearbeitungstyp	Pulverbeschichtung mit duroplastischen Pulvern

Oberfläche Oberfläche diffusor	
Farbe	Transparent

Oberfläche Oberfläche fassung	
Material	Metall
Farbe	Text white RAL9003
Bearbeitungstyp	Lackierung

Cables Pendelleuchte	
Max. Kabellänge	5300 mm

Linea Light Group reserves the right, without any advance notice, to change the characteristics of their products, as well as the availability of the same at any time. No product, relative technical data, illustrations and information are binding for Linea Light Group. Linea Light Group will not be held liable for any illustration, text and/or translation\ errors. All values indicated are measured values. There is a +/- 10% tolerance for the flow, CCT and power data.

Pendelleuchte | 220-240 V | 126 topLED 50 W DC - 55 W AC | CRI 90
8891

Double emission pendant luminaires for indoor application. The warm white LED light source with a diffused light distribution is composed of 126 topled LEDs with CCT of 3000 K and a CRI 90; the source luminous flux is 6219 lm, with a 124.4 lm/W nominal luminous efficacy.

The device body is made of die-cast aluminium and features a text white ral9003 finish, processed by means of powder coating with thermosetting powders; the diffuser is made with a laser engravings treatment; the mounting frame is made of metal, with a text white ral9003 finish, processed by means of coating.

The ingress protection degree is IP20;

The total absorbed power is 55 W The power supply cable is included and features a 5.3 m length.

The device features protection class I and can be ceiling-mounted.

Compliant with the EN 60598-1 standard and its specific provisions.

Energieeffizienzklasse
Dieses Produkt enthält 3 Lichtquellen der Energieeffizienzklasse E.

Illuminotechnical Eigenschaften	
Light Output Ratio (LOR)	48 %
Lichtstrom (Lichtquelle)	6219 lm
Leuchten Lichtstrom	2998 lm
Consumption	55 W
Leuchten Lichtausbeute	54 lm/W
Farbtemperatur	3000 K
Standard Deviation of Colour Matching	3 Step MacAdam
Farbwiedergabeindex	90 Ra
Verbindungstemperatur (Leuchte)	80
Standardumgebungstemperatur	25°C

LED Life / Failure Ratio
L70 B10 C0 102000h (at Tj 115 Ta 25)
L90 B10 C0 55000h

UGR	
UGR axial	16.5
UGR transversal	16.8
X=4H | Y=8H	S=0.25H
Reflection factor	70/50/20

OPTICAL	
Optik C90/C270	50°
Optik C0/C180	57°
Light distribution simmetry	Symmetrical 2 assis

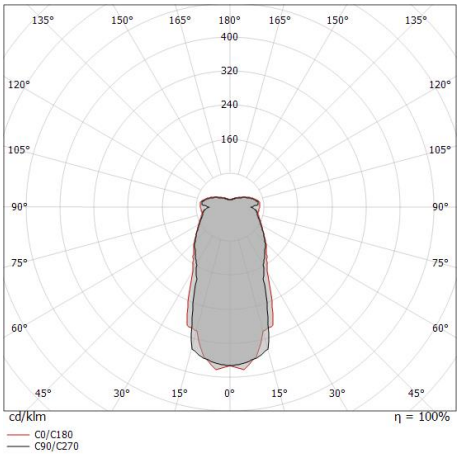

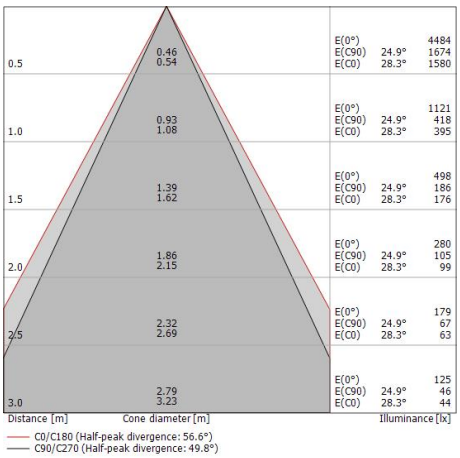

Linea Light Group reserves the right, without any advance notice, to change the characteristics of their products, as well as the availability of the same at any time. No product, relative technical data, illustrations and information are binding for Linea Light Group. Linea Light Group will not be held liable for any illustration, text and/or translation\ errors. All values indicated are measured values. There is a +/- 10% tolerance for the flow, CCT and power data.

Demì | Pendant Luminaires | Accessories
8891

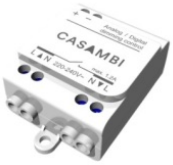

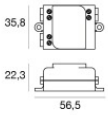

Dimmer - 0-10V, 1-10V oder DALI-Dimmschnittstelle
Bluetooth, 220-240V

Code
KIT0079

Linea Light Group reserves the right, without any advance notice, to change the characteristics of their products, as well as the availability of the same at any time. No product, relative technical data, illustrations and information are binding for Linea Light Group. Linea Light Group will not be held liable for any illustration, text and/or translation\ errors. All values indicated are measured values. There is a +/- 10% tolerance for the flow, CCT and power data.