Tu-O

Pendelleuchte | 220-240 V
256 topLED 32 W DC - 36 W AC | CRI 90
8845N

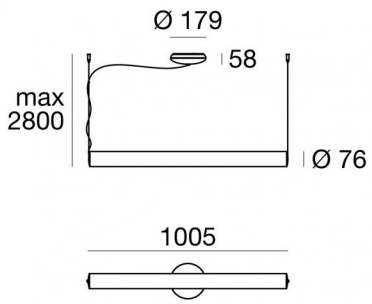

Technische Daten	
Typ	Oberfläche
Installationsposition	Decke
Installationsumgebung	Indoor
Lichtquelle	LED
Circuit structure	topLED
Optik	Diffuses
Light emission direction	downward and upward
Lampe Nennleistung	32 W DC
Gesamtleistung	36 W
Lichtstrom (Lichtquelle)	5166 lm
Nominale Eingangsspannung	220 - 240 V AC
Eingangsspannungsbereich	220 - 240 V AC
Frequency	60 - 50 Hz
Ähnlichste Farbtemperatur / Tone	4000 K
Farbwiedergabeindex	90 Ra
Gleichstrom/Gleichspannung	AC
Isolierklasse	1
IP	IP20
Glühdrahtprüfung	850°
Direkte Montage auf normal entflammbaren Oberflächen	Ja
CE	Ja
Einschließlich Driver	Driver
Leuchte dimmbar	DALI - PUSH DIM
Schwenkbarkeit	Nein
Drehbarkeit	Nein
Begehbarkeit	Nein
Überrollbarkeit	Nein
Einschließlich Kabel	Ja
Kabellänge	2.8 m
Harzbeschichtung	Nein
Typ Lichtabstrahlung	Zweiflammig
Nettogewicht	2.15 Kg
Schutz vor elektrostatischen Entladungen	Nein
Schutz vor Stoßspannungen	Nein

Oberfläche Oberfläche Gehäuse	
Material	Aluminium
Farbe	Text white RAL9003
Bearbeitungstyp	Lackierung

Oberfläche Oberfläche diffusor	
Material	PMMA
Farbe	Opal

Oberfläche Oberfläche fassung	
Material	Eisen
Farbe	Text white RAL9003
Bearbeitungstyp	Lackierung

Cables Electrification+suspension	
Max. Kabellänge	2800 mm

Linea Light Group reserves the right, without any advance notice, to change the characteristics of their products, as well as the availability of the same at any time. No product, relative technical data, illustrations and information are binding for Linea Light Group. Linea Light Group will not be held liable for any illustration, text and/or translation\ errors. All values indicated are measured values. There is a +/- 10% tolerance for the flow, CCT and power data.

Pendelleuchte | 220-240 V | 256 topLED 32 W DC - 36 W AC | CRI 90
8845N

Double emission pendant luminaires for indoor application. The natural white LED light source with a diffused light distribution is composed of 256 topled LEDs with CCT of 4000 K and a CRI 90; the source luminous flux is 5166 lm, with a 161.4 lm/W nominal luminous efficacy.

The device body is made of aluminium and features a text white ral9003 finish, processed by means of coating; the diffuser is made of pmma; the mounting frame is made of iron, with a text white ral9003 finish, processed by means of coating.

The ingress protection degree is IP20; the total weight is of 2.15 kg.

The total absorbed power is 36 W The power supply cable is included and features a 2.8 m length.

The device features protection class I and can be ceiling-mounted.

Compliant with the EN 60598-1 standard and its specific provisions.

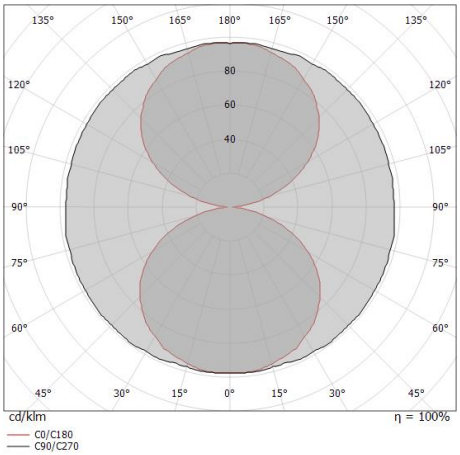

Energieeffizienzklasse
Dieses Produkt enthält 8 Lichtquellen der Energieeffizienzklasse D.

Illuminotechnical Eigenschaften	
Light Output Ratio (LOR)	86 %
Lichtstrom (Lichtquelle)	5166 lm
Leuchten Lichtstrom	4492 lm
Consumption	36 W
Leuchten Lichtausbeute	124 lm/W
Farbtemperatur	4000 K
Standard Deviation of Colour Matching	3 Step MacAdam
Farbwiedergabeindex	90 Ra
Verbindungstemperatur (Leuchte)	80
Standardumgebungstemperatur	25°C

LED Life / Failure Ratio
L70 B10 C0 102000h (at Tj 115 Ta 25)
L90 B10 C0 55000h

UGR	
UGR axial	21.8
UGR transversal	18.2
X=4H | Y=8H	S=0.25H
Reflection factor	70/50/20

OPTICAL	
Optik C90/C270	180°
Optik C0/C180	124°
Light distribution simmetry	Symmetrical 2 assis

Linea Light Group reserves the right, without any advance notice, to change the characteristics of their products, as well as the availability of the same at any time. No product, relative technical data, illustrations and information are binding for Linea Light Group. Linea Light Group will not be held liable for any illustration, text and/or translation\ errors. All values indicated are measured values. There is a +/- 10% tolerance for the flow, CCT and power data.

Tu-O | Pendant Luminaires | Accessories
8845N

Blendschutz

Material:Eisen, farbe:Text black RAL9005, bearbeitungstyp :Lackierung.

Code
KIT0112

Linea Light Group reserves the right, without any advance notice, to change the characteristics of their products, as well as the availability of the same at any time. No product, relative technical data, illustrations and information are binding for Linea Light Group. Linea Light Group will not be held liable for any illustration, text and/or translation\ errors. All values indicated are measured values. There is a +/- 10% tolerance for the flow, CCT and power data.