Nitum_R

Downlights | 1 x powerLED 2 W DC 630 mA
88423C12

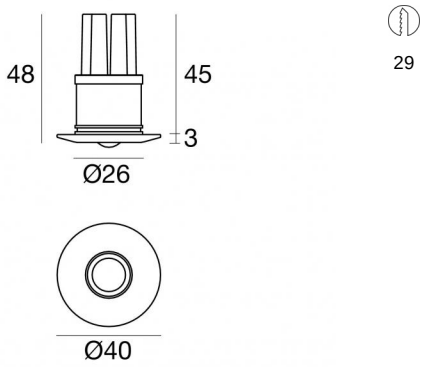

Technische Daten	
Installationsposition	Wand - Decke
Installationsumgebung	Indoor
Isolierklasse	3
IP	IP44
Glühdrahtprüfung	850°
Direkte Montage auf normal entflammbaren Oberflächen	Ja
CE	Ja
Einschließlich Driver	Nein
Leuchte dimmbar	DALI - 1-10V
Schwenkbarkeit	Nein
Drehbarkeit	Nein
Begehbarkeit	Nein
Überrollbarkeit	Nein
Einschließlich Kabel	Ja
Kabellänge	0.12 m
Harzbeschichtung	Ja
Einbautiefe	45 mm
Typ Lichtabstrahlung	Einflammig
Nettogewicht	0.07 Kg
Schutz vor elektrostatischen Entladungen	Nein
Schutz vor Stoßspannungen	Nein

Oberfläche Oberfläche Gehäuse	
Material	Messing OT58
Farbe	Text white RAL9003
Bearbeitungstyp	Pulverbeschichtung mit duroplastischen Pulvern

Oberfläche Oberfläche strahler	
Material	Aluminium
Farbe	Anodised aluminium
Bearbeitungstyp	Eloxierung

Elektronik

89147
On/Off Driver 198~264V AC / 180~275V DC (1 - 2 art.)

99105
On/Off Driver 198~264V AC (6 - 12 art.)

99374
On/Off Driver 198~264V AC / 176~275V DC 75 W (1 - 37 art.)

99710
1-10V - 0-10V Converter V DC (- art.)

99713
DALI Converter V DC (- art.)

99376
On/Off Driver 198~264V AC (3 - 6 art.)

Linea Light Group reserves the right, without any advance notice, to change the characteristics of their products, as well as the availability of the same at any time. No product, relative technical data, illustrations and information are binding for Linea Light Group. Linea Light Group will not be held liable for any illustration, text and/or translation\ errors. All values indicated are measured values. There is a +/- 10% tolerance for the flow, CCT and power data.

Nitum_R | Downlights | Accessories
88423C12

Einbaugehäuse
installationsposition: decke; typ installation: mauerwerk L=69mm, H=60mm, D=60mm.
Material:Kunststoff ABS, farbe:Black.

Code
84901

Linea Light Group reserves the right, without any advance notice, to change the characteristics of their products, as well as the availability of the same at any time. No product, relative technical data, illustrations and information are binding for Linea Light Group. Linea Light Group will not be held liable for any illustration, text and/or translation\ errors. All values indicated are measured values. There is a +/- 10% tolerance for the flow, CCT and power data.