Aspho_R

Downlights | 1 x 5mmLED 0.5 W DC 24 V | CRI 80
88417C30

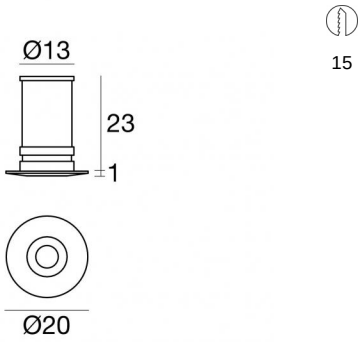

Technische Daten	
Installationsposition	Wand - Decke
Installationsumgebung	Indoor
Lichtquelle	LED
Circuit structure	5mmLED
Optik	Medium Wide Flood
Light emission direction	downward
Lampe Nennleistung	0.5 W DC
Lichtstrom (Lichtquelle)	58 lm
Ähnlichste Farbtemperatur / Tone	5000 K
Farbwiedergabeindex	80 Ra
Gleichstrom/Gleichspannung	CV
Isolierklasse	3
IP	IP44
Glühdrahtprüfung	850°
Direkte Montage auf normal entflammbaren Oberflächen	Ja
CE	Ja
Einschließlich Driver	Nein
Leuchte dimmbar	DALI - 1-10V
Schwenkbarkeit	Nein
Drehbarkeit	Nein
Begehbarkeit	Nein
Überrollbarkeit	Nein
Einschließlich Kabel	Ja
Kabellänge	0.12 m
Harzbeschichtung	Ja
Einbautiefe	23 mm
Typ Lichtabstrahlung	Einflammig
Nettogewicht	0.015 Kg
Schutz vor elektrostatischen Entladungen	Nein
Schutz vor Stoßspannungen	Nein

Oberfläche Oberfläche Gehäuse	
Material	Messing OT58
Farbe	Text white RAL9003
Bearbeitungstyp	Pulverbeschichtung mit duroplastischen Pulvern

Elektronik

89408
On/Off Driver 198~264V AC / V DC 5 W (1 - 10 art.)

99332
1-10V Controller (1 - 300 art.)

99374
On/Off Driver 198~264V AC / 176~275V DC 75 W (1 - 150 art.)

99722
DALI Controller 90~305V AC / V DC (1 - 240 art.)

83333
Push and Simply Dim - DALI-2 Controller (1 - 302 art.)

Linea Light Group reserves the right, without any advance notice, to change the characteristics of their products, as well as the availability of the same at any time. No product, relative technical data, illustrations and information are binding for Linea Light Group. Linea Light Group will not be held liable for any illustration, text and/or translation\ errors. All values indicated are measured values. There is a +/- 10% tolerance for the flow, CCT and power data.

Downlights | 1 x 5mmLED 0.5 W DC 24 V | CRI 80
88417C30

Single emission recessed downlights for indoor application. The cold white LED light source with a medium wide flood light distribution is composed of 1 5mmled LEDs with CCT of 5000 K and a CRI 80; the source luminous flux is 58 lm, with a 116.0 lm/W nominal luminous efficacy.

The device body is made of brass ot58 and features a text white ral9003 finish, processed by means of powder coating with thermosetting powders.

The ingress protection degree is IP44; the total weight is of 0.015 kg. The power supply driver is not provided and is to be ordered separately.

The total absorbed power is 0.5 W The power supply cable is included and features a 0.12 m length.

The device features protection class III and can be wall lights or ceiling-mounted, with a 15 mm diameter hole (in plasterboard) with an outer casing, code 84335(for concrete or masonry).

Compliant with the EN 60598-1 standard and its specific provisions.

Energieeffizienzklasse
Dieses Produkt enthält eine Lichtquelle der Energieeffizienzklasse G.

Illuminotechnical Eigenschaften	
Light Output Ratio (LOR)	13 %
Lichtstrom (Lichtquelle)	58 lm
Leuchten Lichtstrom	8 lm
Consumption	0,5 W
Farbtemperatur	5000 K
Farbwiedergabeindex	80 Ra
Standardumgebungstemperatur	-20 / +50°C
Typische Temperatur am Glas	40°C

UGR	
UGR axial	33.9
UGR transversal	34.4
X=4H | Y=8H	S=0.25H
Reflection factor	70/50/20

OPTICAL	
Optik C0/C180	45°
Light distribution simmetry	Symmetrical

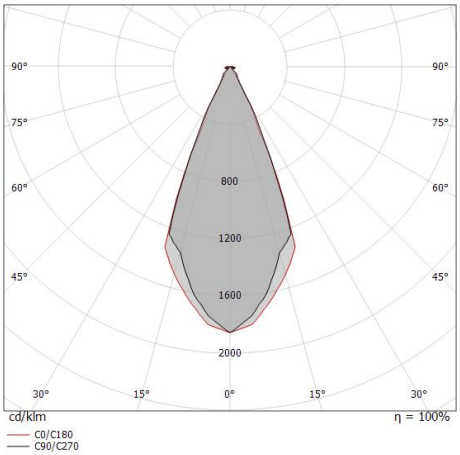

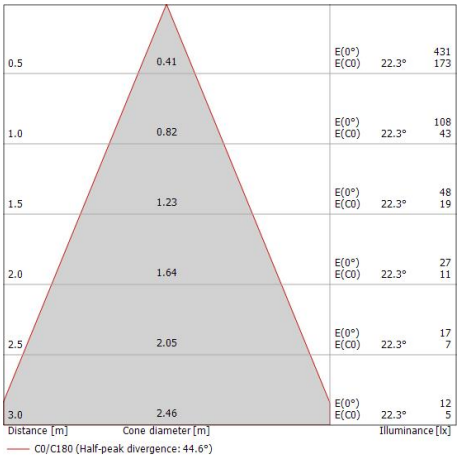

Linea Light Group reserves the right, without any advance notice, to change the characteristics of their products, as well as the availability of the same at any time. No product, relative technical data, illustrations and information are binding for Linea Light Group. Linea Light Group will not be held liable for any illustration, text and/or translation\ errors. All values indicated are measured values. There is a +/- 10% tolerance for the flow, CCT and power data.

Aspho_R | Downlights | Accessories
88417C30

Einbaugehäuse
installationsposition: wand; typ installation: mauerwerk L=35mm, H=20mm, D=20mm.
Material:Kunststoff ABS, farbe:Black.

Code
84335

Linea Light Group reserves the right, without any advance notice, to change the characteristics of their products, as well as the availability of the same at any time. No product, relative technical data, illustrations and information are binding for Linea Light Group. Linea Light Group will not be held liable for any illustration, text and/or translation\ errors. All values indicated are measured values. There is a +/- 10% tolerance for the flow, CCT and power data.