Nitum_Q

Downlights | 1 x powerLED 2 W DC 630 mA | CRI 80
86884M12

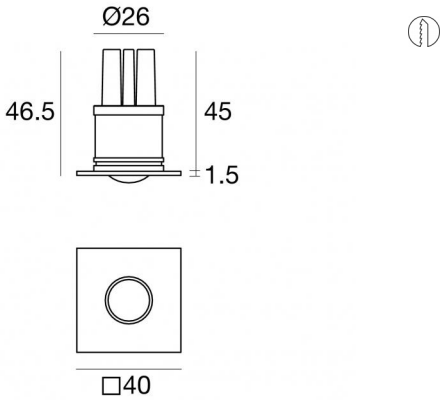

Technische Daten	
Installationsposition	Wand - Decke
Installationsumgebung	Indoor
Lichtquelle	LED
Circuit structure	powerLED
Optik	Extra Wide Flood
Lampe Nennleistung	2 W DC
Lichtstrom (Lichtquelle)	219 lm
Eingangsspannungsbereich	630mA
Ähnlichste Farbtemperatur / Tone	2700 K
Farbwiedergabeindex	80 Ra
Gleichstrom/Gleichspannung	CC
Isolierklasse	3
IP	IP44
Glühdrahtprüfung	850°
Direkte Montage auf normal entflammbaren Oberflächen	Ja
CE	Ja
Einschließlich Driver	Nein
Leuchte dimmbar	DALI - 1-10V
Schwenkbarkeit	Nein
Drehbarkeit	Nein
Begehbarkeit	Nein
Überrollbarkeit	Nein
Einschließlich Kabel	Ja
Kabellänge	0.12 m
Harzbeschichtung	Ja
Einbautiefe	45 mm
Typ Lichtabstrahlung	Einflammig
Nettogewicht	0.073 Kg
Schutz vor elektrostatischen Entladungen	Nein
Schutz vor Stoßspannungen	Nein

Oberfläche Oberfläche Gehäuse	
Material	Edelstahl 316L
Farbe	Stahl
Bearbeitungstyp	Kugelstrahlen

Oberfläche Oberfläche strahler	
Material	Aluminium
Farbe	Anodised aluminium
Bearbeitungstyp	Eloxierung

Elektronik

89147
On/Off Driver 198~264V AC / 180~275V DC

99105
On/Off Driver 198~264V AC

99374
On/Off Driver 198~264V AC / 176~275V DC 75 W

99710
1-10V - 0-10V Converter V DC

99713
DALI Converter V DC

99376
On/Off Driver 198~264V AC

Linea Light Group reserves the right, without any advance notice, to change the characteristics of their products, as well as the availability of the same at any time. No product, relative technical data, illustrations and information are binding for Linea Light Group. Linea Light Group will not be held liable for any illustration, text and/or translation\ errors. All values indicated are measured values. There is a +/- 10% tolerance for the flow, CCT and power data.

Downlights | 1 x powerLED 2 W DC 630 mA | CRI 80
86884M12

Single emission recessed downlights for indoor application. The super warm white LED light source with a extra wide flood light distribution is composed of 1 powerled LEDs with CCT of 2700 K and a CRI 80; the source luminous flux is 219 lm, with a 109.5 lm/W nominal luminous efficacy.

The device body is made of stainless steel and features a steel finish, processed by means of shot peening. The robust steel structure enhances the fixture's design and ensures long?lasting performance, even in the most demanding environments.

The ingress protection degree is IP44; the total weight is of 0.073 kg. The power supply driver is not provided and is to be ordered separately.

The total absorbed power is 2 W The power supply cable is included and features a 0.12 m length.

The device features protection class III and can be wall lights or ceiling-mounted, with a mm diameter hole (in plasterboard) with an outer casing, code 84901(for concrete or masonry).

Compliant with the EN 60598-1 standard and its specific provisions.

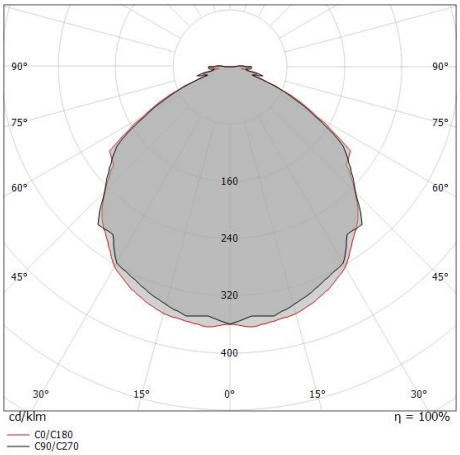

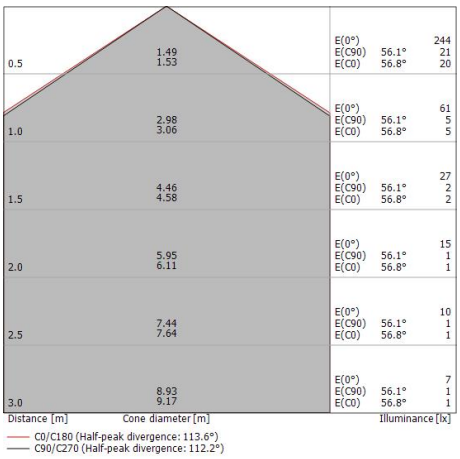

Energieeffizienzklasse
Dieses Produkt enthält eine Lichtquelle der Energieeffizienzklasse D.

Illuminotechnical Eigenschaften	
Light Output Ratio (LOR)	77 %
Lichtstrom (Lichtquelle)	219 lm
Leuchten Lichtstrom	170 lm
Consumption	2,0 W
Leuchten Lichtausbeute	85 lm/W
Farbtemperatur	2700 K
Standard Deviation of Colour Matching	1.5 Step
Farbwiedergabeindex	80 Ra
UV-C Power	1,0 W
Standardumgebungstemperatur	-20 / +50°C
Typische Temperatur am Glas	40°C

LED Life / Failure Ratio
L70 B10 C0 1240219h (at Tj 65 Ta 25)
L80 B10 C0 745627h (at Tj 65 Ta 25)
L90 B10 C0 309367h (at Tj 65 Ta 25)

UGR	
UGR axial	32.4
UGR transversal	32.3
X=4H | Y=8H	S=0.25H
Reflection factor	70/50/20

OPTICAL	
Optik C0/C180	112°
Light distribution simmetry	Symmetrical

Linea Light Group reserves the right, without any advance notice, to change the characteristics of their products, as well as the availability of the same at any time. No product, relative technical data, illustrations and information are binding for Linea Light Group. Linea Light Group will not be held liable for any illustration, text and/or translation\ errors. All values indicated are measured values. There is a +/- 10% tolerance for the flow, CCT and power data.

Nitum_Q | Downlights | Accessories
86884M12

Einbaugehäuse
installationsposition: decke; typ installation: mauerwerk L=69mm, H=60mm, D=60mm.
Material:Kunststoff ABS, farbe:Black.

Code
84901

Linea Light Group reserves the right, without any advance notice, to change the characteristics of their products, as well as the availability of the same at any time. No product, relative technical data, illustrations and information are binding for Linea Light Group. Linea Light Group will not be held liable for any illustration, text and/or translation\ errors. All values indicated are measured values. There is a +/- 10% tolerance for the flow, CCT and power data.