Nitum_R

Downlights | 3 x powerLED 2 W DC 220 mA | RGB
86674Z30

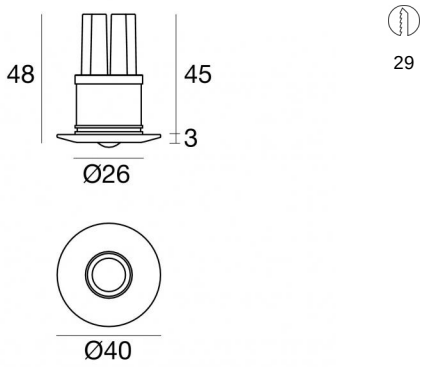

Technische Daten	
Installationsposition	Wand - Decke
Installationsumgebung	Indoor
Lichtquelle	LED
Optik	Flood
Light emission direction	downward
Lampe Nennleistung	2.1 W DC
Lichtstrom (Lichtquelle)	130 lm
Eingangsspannungsbereich	220mA
Ähnlichste Farbtemperatur / Tone	RGB
Gleichstrom/Gleichspannung	CC
Isolierklasse	3
IP	IP44
Glühdrahtprüfung	850°
Direkte Montage auf normal entflammbaren Oberflächen	Ja
CE	Ja
Einschließlich Driver	Nein
Leuchte dimmbar	Ja
Schwenkbarkeit	Nein
Drehbarkeit	Nein
Begehbarkeit	Nein
Überrollbarkeit	Nein
Einschließlich Kabel	Ja
Kabellänge	0.12 m
Harzbeschichtung	Ja
Einbautiefe	45 mm
Typ Lichtabstrahlung	Einflammig
Nettogewicht	0.072 Kg
Schutz vor elektrostatischen Entladungen	Nein
Schutz vor Stoßspannungen	Nein

Oberfläche Oberfläche Gehäuse	
Material	Edelstahl 316
Farbe	Stahl
Bearbeitungstyp	Kugelstrahlen

Nennlichtstrom für eine einzelne Farbe - RGB			
N. Led	Rot	Grün	Blau
3	39 lm	68 lm	23 lm

Linea Light Group reserves the right, without any advance notice, to change the characteristics of their products, as well as the availability of the same at any time. No product, relative technical data, illustrations and information are binding for Linea Light Group. Linea Light Group will not be held liable for any illustration, text and/or translation\ errors. All values indicated are measured values. There is a +/- 10% tolerance for the flow, CCT and power data.

Downlights | 3 x powerLED 2 W DC 220 mA | RGB
86674Z30

Single emission recessed downlights for indoor application. The RGB LED light source with a flood light distribution is composed of 3 powerled LEDs the source luminous flux is 130 lm, with a 61.9 lm/W nominal luminous efficacy.

The device body is made of stainless steel and features a steel finish, processed by means of shot peening. The robust steel structure enhances the fixture's design and ensures long?lasting performance, even in the most demanding environments.

The ingress protection degree is IP44; the total weight is of 0.072 kg. The power supply driver is not provided and is to be ordered separately.

The total absorbed power is 2.1 W The power supply cable is included and features a 0.12 m length.

The device features protection class III and can be wall lights or ceiling-mounted, with a 29 mm diameter hole (in plasterboard) with an outer casing, code 84901(for concrete or masonry).

Compliant with the EN 60598-1 standard and its specific provisions.

Illuminotechnical Eigenschaften	
Leuchten Lichtstrom	114 lm
Consumption	2,1 W
Leuchten Lichtausbeute	57 lm/W
Standardumgebungstemperatur	-20 / +50°C
Typische Temperatur am Glas	40°C

LED Life / Failure Ratio
L70 B10 C0 247450h

OPTICAL	
Optik C0/C180	25°
Light distribution simmetry	Symmetrical

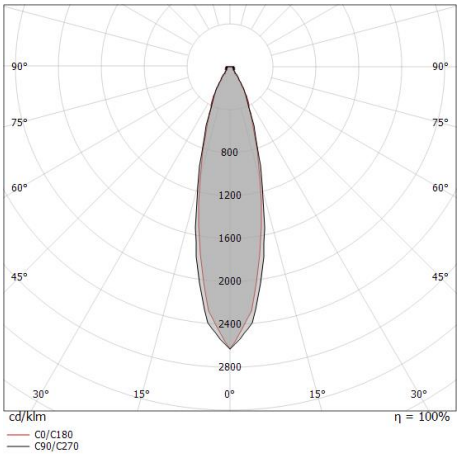

Linea Light Group reserves the right, without any advance notice, to change the characteristics of their products, as well as the availability of the same at any time. No product, relative technical data, illustrations and information are binding for Linea Light Group. Linea Light Group will not be held liable for any illustration, text and/or translation\ errors. All values indicated are measured values. There is a +/- 10% tolerance for the flow, CCT and power data.

Nitum_R | Downlights | Accessories
86674Z30

Einbaugehäuse
installationsposition: decke; typ installation: mauerwerk L=69mm, H=60mm, D=60mm.
Material:Kunststoff ABS, farbe:Black.

Code
84901

Kabel und Stecker
Typ Kabel power cable; Länge 1000 mm; isolierung einzeln; querschnitt 0.5 mm²; farben: blau - grün - rot.

Code
84866

Kabel und Stecker
Typ Kabel power cable; Länge 3000 mm; isolierung einzeln; querschnitt 0.5 mm²; farben: blau - grün - rot.

Code
84867

Kabel und Stecker
Typ Kabel power cable; Länge 1500 mm; isolierung einzeln; querschnitt 0,35 mm²; farben: blau - grün - rot.

Code
84872

Kabel und Stecker
Typ Kabel power cable; Länge 1500 mm; isolierung einzeln; querschnitt 0,35 mm²; farben: weiß - schwarz.

Code
84873

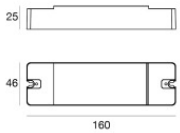

Dimmer - Dimmung über Funkfernbedienung, einzelnen N/O?Taster oder Wi Fi?Netzwerk (Tuya Smart APP). Gerät mit 4 Kanälen: Der erste Dip?Schalter ist für die Stromauswahl vorgesehen, der zweite Dip?Schalter für die Konfiguration: MONO, DYNAMIC, RGB, RGBW. Schutz gegen Übertemperatur, Überlastung, Leitungsunterbrechung und Kurzschluss an der Ausgangsleitung.
RF Remote controller

Code
C-E700003

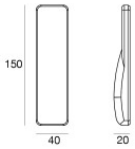

Remote RF - 2.4G?RF?Fernbedienung mit mehreren Funktionen: Dimmen, Geschwindigkeit, Ein/Aus

Code
C-W600001

Linea Light Group reserves the right, without any advance notice, to change the characteristics of their products, as well as the availability of the same at any time. No product, relative technical data, illustrations and information are binding for Linea Light Group. Linea Light Group will not be held liable for any illustration, text and/or translation\ errors. All values indicated are measured values. There is a +/- 10% tolerance for the flow, CCT and power data.