Nitum_Q

Downlights | 1 x powerLED 1 W DC 350 mA | CRI 80
85046M00

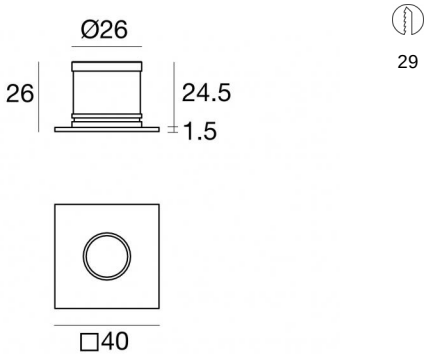

Technische Daten	
Installationsposition	Wand - Decke
Installationsumgebung	Indoor
Lichtquelle	LED
Circuit structure	powerLED
Optik	Diffuses
Lampe Nennleistung	1 W DC
Lichtstrom (Lichtquelle)	136 lm
Eingangsspannungsbereich	350mA
Ähnlichste Farbtemperatur / Tone	2700 K
Farbwiedergabeindex	80 Ra
Gleichstrom/Gleichspannung	CC
Isolierklasse	3
IP	IP44
Glühdrahtprüfung	850°
Direkte Montage auf normal entflammbaren Oberflächen	Ja
CE	Ja
Einschließlich Driver	Nein
Leuchte dimmbar	DALI - 1-10V
Schwenkbarkeit	Nein
Drehbarkeit	Nein
Begehbarkeit	Nein
Überrollbarkeit	Nein
Einschließlich Kabel	Ja
Kabellänge	0.12 m
Harzbeschichtung	Ja
Einbautiefe	24.5 mm
Typ Lichtabstrahlung	Einflammig
Nettogewicht	0.06 Kg
Schutz vor elektrostatischen Entladungen	Nein
Schutz vor Stoßspannungen	Nein

Oberfläche Oberfläche Gehäuse	
Material	Messing gebürstet
Farbe	Brushed nickel
Bearbeitungstyp	Bürsten

Elektronik

89144
On/Off Driver 198~264V AC / 180~275V DC (1 - 2 art.)

89145
On/Off Driver 198~264V AC / 180~275V DC (3 - 6 art.)

99374
On/Off Driver 198~264V AC / 176~275V DC 75 W (1 - 75 art.)

99708
1-10V - 0-10V Converter V DC (- art.)

99711
DALI Converter V DC (- art.)

99375
On/Off Driver 198~264V AC (6 - 12 art.)

Linea Light Group reserves the right, without any advance notice, to change the characteristics of their products, as well as the availability of the same at any time. No product, relative technical data, illustrations and information are binding for Linea Light Group. Linea Light Group will not be held liable for any illustration, text and/or translation\ errors. All values indicated are measured values. There is a +/- 10% tolerance for the flow, CCT and power data.

Downlights | 1 x powerLED 1 W DC 350 mA | CRI 80
85046M00

Single emission recessed downlights for indoor application. The super warm white LED light source with a diffused light distribution is composed of 1 powerled LEDs with CCT of 2700 K and a CRI 80; the source luminous flux is 136 lm, with a 136.0 lm/W nominal luminous efficacy.

The device body is made of brass and features a brushed nickel finish, processed by means of brushing.

The ingress protection degree is IP44; the total weight is of 0.06 kg. The power supply driver is not provided and is to be ordered separately.

The total absorbed power is 1 W The power supply cable is included and features a 0.12 m length.

The device features protection class III and can be wall lights or ceiling-mounted, with a 29 mm diameter hole (in plasterboard) with an outer casing, code 84915(for concrete or masonry).

Compliant with the EN 60598-1 standard and its specific provisions.

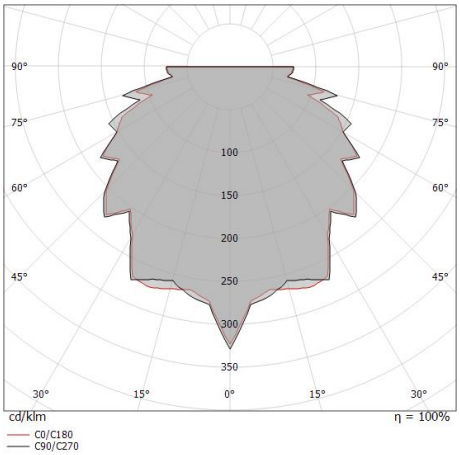

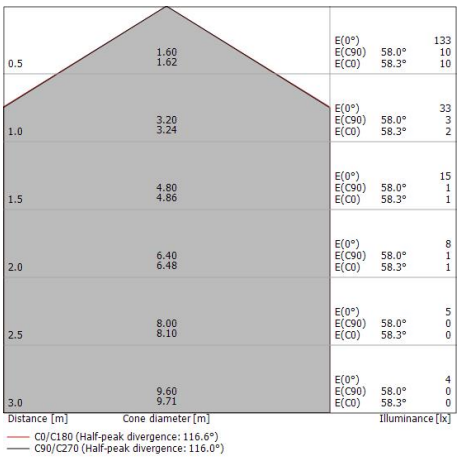

Energieeffizienzklasse
Dieses Produkt enthält eine Lichtquelle der Energieeffizienzklasse D.

Illuminotechnical Eigenschaften	
Light Output Ratio (LOR)	75 %
Lichtstrom (Lichtquelle)	136 lm
Leuchten Lichtstrom	103 lm
Consumption	1,0 W
Leuchten Lichtausbeute	103 lm/W
Farbtemperatur	2700 K
Standard Deviation of Colour Matching	1.5 Step
Farbwiedergabeindex	80 Ra
Standardumgebungstemperatur	-20 / +50°C
Typische Temperatur am Glas	40°C

LED Life / Failure Ratio
L70 B10 C0 1240219h (at Tj 65 Ta 25)
L80 B10 C0 745627h (at Tj 65 Ta 25)
L90 B10 C0 309367h (at Tj 65 Ta 25)

UGR	
UGR axial	35.3
UGR transversal	35
X=4H | Y=8H	S=0.25H
Reflection factor	70/50/20

OPTICAL	
Optik C0/C180	116°
Light distribution simmetry	Symmetrical

Linea Light Group reserves the right, without any advance notice, to change the characteristics of their products, as well as the availability of the same at any time. No product, relative technical data, illustrations and information are binding for Linea Light Group. Linea Light Group will not be held liable for any illustration, text and/or translation\ errors. All values indicated are measured values. There is a +/- 10% tolerance for the flow, CCT and power data.

Nitum_Q | Downlights | Accessories
85046M00

Einbaugehäuse
installationsposition: decke; typ installation: mauerwerk L=42mm, H=35mm, D=35mm.
Material:Kunststoff ABS, farbe:Black.

Code
84336

Einbaugehäuse
installationsposition: wand; typ installation: mauerwerk L=49mm, H=60mm, D=60mm.
Material:Kunststoff ABS, farbe:Black.

Code
84915

Linea Light Group reserves the right, without any advance notice, to change the characteristics of their products, as well as the availability of the same at any time. No product, relative technical data, illustrations and information are binding for Linea Light Group. Linea Light Group will not be held liable for any illustration, text and/or translation\ errors. All values indicated are measured values. There is a +/- 10% tolerance for the flow, CCT and power data.