Poller & Mastaufsatzleuchten - Lichtpoller
100-305 V AC /142-431 V DC | 60 x powerLEDs 110 W DC - 120 W AC | CRI 80
84511A79



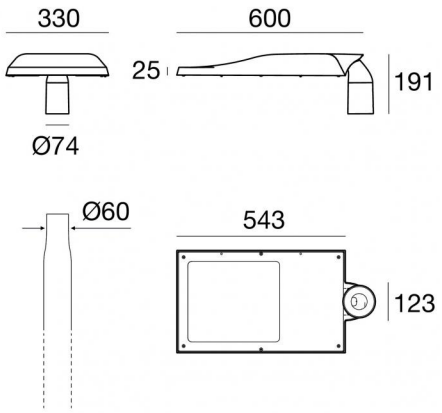

Technische Daten	
Typ	Poller & Mastaufsatzleuchten - Lichtpoller
Installationsposition	Mast
Installationsumgebung	Outdoor
Lichtquelle	LED
Circuit structure	powerLEDs
Optik	Park
Light emission direction	downward
Lampe Nennleistung	110 W DC
Gesamtleistung	120 W
Lichtstrom (Lichtquelle)	10898 lm
Nominale Eingangsspannung	220 - 240 V AC
Eingangsspannungsbereich	100 - 305 V AC
Frequency	47 - 63 Hz
Ähnlichste Farbtemperatur / Tone	2200 K
Farbwiedergabeindex	80 Ra
Gleichstrom/Gleichspannung	AC
Isolierklasse	1
IP	IP66
IK	IK08
Glühdrahtprüfung	850°
Direkte Montage auf normal entflammbaren Oberflächen	Ja
CE	Ja
Einschließlich Driver	Driver
Leuchte dimmbar	Nein
Schwenkbarkeit	Orientabile
Drehbarkeit	Nein
Begehbarkeit	Nein
Überrollbarkeit	Nein
Einschließlich Kabel	Ja
Kabellänge	1 m
Harzbeschichtung	Nein
Typ Lichtabstrahlung	Einflammig
Oberfläche Seitenwind ausgesetzt	0.04 m²
Oberfläche dem Wind ausgesetzt - Plan	0.18 m²
Nettogewicht	8.5 Kg
Schutz vor elektrostatischen Entladungen	Ja
Schutz vor Stoßspannungen	Ja
Technische Merkmale des Produkts	TCS

Oberfläche Oberfläche Gehäuse	
Material	Stranggepresstes Aluminium EN AB - 46100
Farbe	Grau
Bearbeitungstyp	Pulverbeschichtung mit duroplastischen Pulvern

Oberfläche Oberfläche diffusor	
Material	Extra-helles Glas
Farbe	transparent
Bearbeitungstyp	Siebdruck

Cables Electrification	
Cable connector	No

Linea Light Group reserves the right, without any advance notice, to change the characteristics of their products, as well as the availability of the same at any time. No product, relative technical data, illustrations and information are binding for Linea Light Group. Linea Light Group will not be held liable for any illustration, text and/or translation\ errors. All values indicated are measured values. There is a +/- 10% tolerance for the flow, CCT and power data.

Poller & Mastaufsatzleuchten - Lichtpoller | 100-305 V AC /142-431 V DC | 60 x powerLEDs
110 W DC - 120 W AC | CRI 80
84511A79

Single emission bollard & pole for outdoor application. The ancient white LED light source with a park light distribution is composed of 60 powerled LEDs with CCT of 2200 K and a CRI 80; the source luminous flux is 10898 lm, with a 99.1 lm/W nominal luminous efficacy.

The device body is made of die-cast aluminium en ab - 46100 and features a grey finish, processed by means of powder coating with thermosetting powders; the diffuser is made of extra clear glass with a silk-screening treatment.

The ingress protection degree is IP66; the total weight is of 8.5 kg.

The total absorbed power is 120 W The power supply cable is included and features a 1 m length.

The device features protection class I and can be pole-mounted.

Compliant with the EN 60598-1 standard and its specific provisions.

Energieeffizienzklasse
Dieses Produkt enthält eine Lichtquelle der Energieeffizienzklasse F.

Illuminotechnical Eigenschaften	
Light Output Ratio (LOR)	80 %
Lichtstrom (Lichtquelle)	10898 lm
Leuchten Lichtstrom	8791 lm
Consumption	120 W
Leuchten Lichtausbeute	73 lm/W
Farbtemperatur	2200 K
Standard Deviation of Colour Matching	1/16 ANSI BIN
Farbwiedergabeindex	80 Ra
Standardumgebungstemperatur	-20 / +50°C

LED Life / Failure Ratio
L70 B10 C0 214455h (at Tj 65 Ta 25)
L80 B10 C0 136355h (at Tj 65 Ta 25)
L90 B10 C0 67466h (at Tj 65 Ta 25)

OPTICAL	
Optik C0/C180	129°
Light distribution simmetry	Asymmetrical

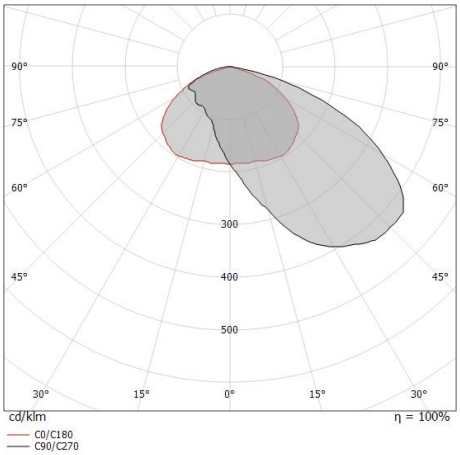

Linea Light Group reserves the right, without any advance notice, to change the characteristics of their products, as well as the availability of the same at any time. No product, relative technical data, illustrations and information are binding for Linea Light Group. Linea Light Group will not be held liable for any illustration, text and/or translation\ errors. All values indicated are measured values. There is a +/- 10% tolerance for the flow, CCT and power data.