Scheinwerfer | 198-264 V AC /180-275 V DC
3 arrayLED 185 W DC - 200 W AC | CRI 80
84443W12



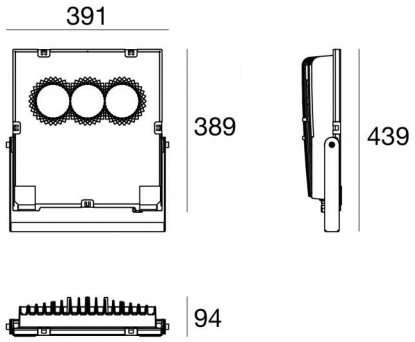

Technische Daten	
Typ	Oberfläche
Installationsposition	Wand - Decke - Boden
Installationsumgebung	Outdoor
Lichtquelle	LED
Circuit structure	arrayLED
Optik	Extra Wide Flood
Light emission direction	frontal
Lampe Nennleistung	185 W DC
Gesamtleistung	200 W
Lichtstrom (Lichtquelle)	30771 lm
Nominale Eingangsspannung	220 - 240 V AC
Eingangsspannungsbereich	198 - 264 V AC
Frequency	50 - 60 Hz
Ähnlichste Farbtemperatur / Tone	3000 K
Farbwiedergabeindex	80 Ra
Gleichstrom/Gleichspannung	AC
Isolierklasse	1
IP	IP66
IK	IK08
Glühdrahtprüfung	850°
Direkte Montage auf normal entflammbaren Oberflächen	Ja
CE	Ja
Einschließlich Driver	Driver
Leuchte dimmbar	DALI
Schwenkbarkeit	Orientabile
Gesamtwinkel (vertikale Ebene)	180 °
Gesamtwinkel (horizontale Ebene)	0 °
Drehbarkeit	Nein
Begehbarkeit	Nein
Überrollbarkeit	Nein
Einschließlich Kabel	Nein
Kabellänge	0.2 m
Harzbeschichtung	Nein
Typ Lichtabstrahlung	Einflammig
Oberfläche Seitenwind ausgesetzt	0.039 m²
Oberfläche dem Wind ausgesetzt - Plan	0.13 m²
Nettogewicht	7.8 Kg
Schutz vor elektrostatischen Entladungen	Ja
Schutz vor Stoßspannungen	5 KV

Oberfläche Oberfläche Gehäuse	
Material	Stranggepresstes Aluminium EN AB - 46100
Farbe	Text black RAL9005
Bearbeitungstyp	Pulverbeschichtung mit duroplastischen Pulvern

Oberfläche Oberfläche diffusor	
Material	Extra-helles Glas - Gehärtet
Farbe	transparent
Bearbeitungstyp	Siebdruck

Oberfläche Oberfläche bügel	
Material	Eisen
Farbe	Text black RAL9005
Bearbeitungstyp	Kataphorese + Pulvermalerei

Cables Electrification+signal	
Cable connector	No

Linea Light Group reserves the right, without any advance notice, to change the characteristics of their products, as well as the availability of the same at any time. No product, relative technical data, illustrations and information are binding for Linea Light Group. Linea Light Group will not be held liable for any illustration, text and/or translation\ errors. All values indicated are measured values. There is a +/- 10% tolerance for the flow, CCT and power data.

Scheinwerfer | 198-264 V AC /180-275 V DC | 3 arrayLED 185 W DC - 200 W AC | CRI 80
84443W12

Single emission projectors for outdoor application. The warm white LED light source with a extra wide flood light distribution is composed of 3 arrayled LEDs with CCT of 3000 K and a CRI 80; the source luminous flux is 30771 lm, with a 166.3 lm/W nominal luminous efficacy.

The device body is made of die-cast aluminium en ab - 46100 and features a text black ral9005 finish, processed by means of powder coating with thermosetting powders; the diffuser is made of extra clear glass - tempered with a silk-screening treatment.

The ingress protection degree is IP66; the total weight is of 7.8 kg.

The total absorbed power is 200 W

The device features protection class I and can be wall lights, ceiling or floor-mounted.

Compliant with the EN 60598-1 standard and its specific provisions.

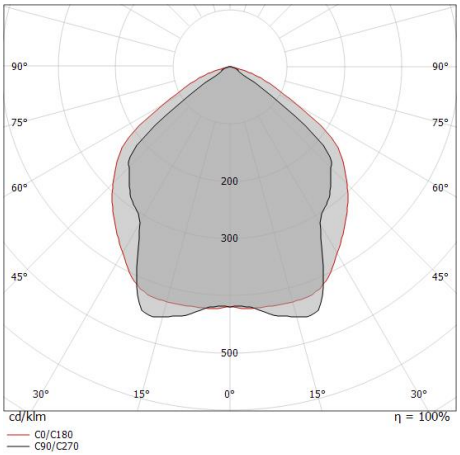

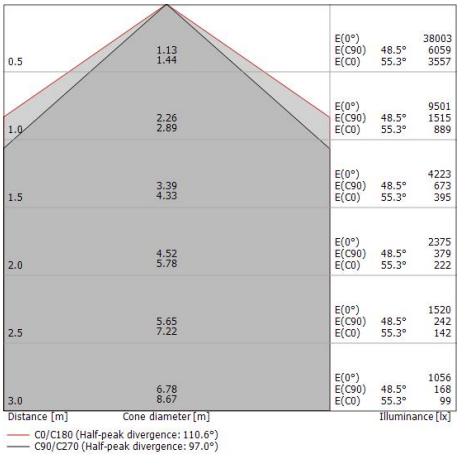

Energieeffizienzklasse
Dieses Produkt enthält 3 Lichtquellen der Energieeffizienzklasse D.

Illuminotechnical Eigenschaften	
Light Output Ratio (LOR)	81 %
Lichtstrom (Lichtquelle)	30771 lm
Leuchten Lichtstrom	24934 lm
Consumption	200 W
Leuchten Lichtausbeute	124 lm/W
Farbtemperatur	3000 K
Standard Deviation of Colour Matching	2 Step MacAdam
Farbwiedergabeindex	80 Ra
Standardumgebungstemperatur	-20 / +50°C
Typische Temperatur am Glas	40°C

LED Life / Failure Ratio
L70 B10 C0 213405h (at Tj 65 Ta 25)
L80 B10 C0 133623h (at Tj 65 Ta 25)
L90 B10 C0 63251h (at Tj 65 Ta 25)

UGR	
UGR axial	29.7
UGR transversal	33
X=4H | Y=8H	S=0.25H
Reflection factor	70/50/20

OPTICAL	
Optik C90/C270	97°
Optik C0/C180	111°
Light distribution simmetry	Symmetrical 2 assis

Linea Light Group reserves the right, without any advance notice, to change the characteristics of their products, as well as the availability of the same at any time. No product, relative technical data, illustrations and information are binding for Linea Light Group. Linea Light Group will not be held liable for any illustration, text and/or translation\ errors. All values indicated are measured values. There is a +/- 10% tolerance for the flow, CCT and power data.

Prolamp | Projectors | Accessories
84443W12



Schutzkäfig aus Stahl

Material:Stahl AISI 304, farbe:Stahl.

Code

83035

Linea Light Group reserves the right, without any advance notice, to change the characteristics of their products, as well as the availability of the same at any time. No product, relative technical data, illustrations and information are binding for Linea Light Group. Linea Light Group will not be held liable for any illustration, text and/or translation\ errors. All values indicated are measured values. There is a +/- 10% tolerance for the flow, CCT and power data.