Deckenleuchten - Industriebeleuchtung
198-264 V AC /176-280 V DC | 96 topLED 49 W DC - 54 W AC | CRI 80
84422N00

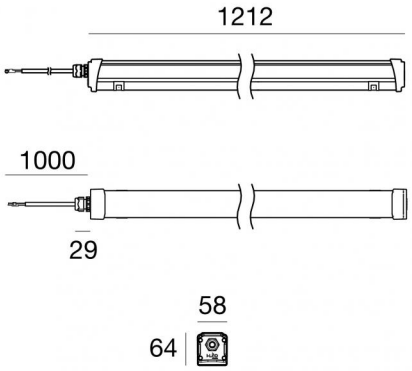

Technische Daten	
Typ	Oberfläche - Industriebeleuchtung
Installationsposition	Decke
Installationsumgebung	Indoor
Lichtquelle	LED
Circuit structure	topLED
Optik	Diffuses
Light emission direction	downward
Lampe Nennleistung	49 W DC
Gesamtleistung	54 W
Lichtstrom (Lichtquelle)	8057 lm
Nominale Eingangsspannung	220 - 240 V AC
Eingangsspannungsbereich	198 - 264 V AC
Frequency	50 - 60 Hz
Ähnlichste Farbtemperatur / Tone	4000 K
Farbwiedergabeindex	80 Ra
Gleichstrom/Gleichspannung	AC
Isolierklasse	1
IP	IP65
IK	IK10
Glühdrahtprüfung	850°
Direkte Montage auf normal entflammbaren Oberflächen	Ja
CE	Ja
Einschließlich Driver	Driver
Leuchte dimmbar	Nein
Schwenkbarkeit	Nein
Drehbarkeit	Nein
Begehbarkeit	Nein
Überrollbarkeit	Nein
Einschließlich Kabel	Ja
Kabellänge	1 m
Harzbeschichtung	Nein
Typ Lichtabstrahlung	Einflammig
Nettogewicht	14.8 Kg
Schutz vor elektrostatischen Entladungen	Ja
Schutz vor Stoßspannungen	2 KV

Oberfläche Oberfläche Gehäuse	
Material	Aluminiumlegierung 6060
Farbe	Anodised aluminium
Bearbeitungstyp	Anodisierung 20 µm

Oberfläche Oberfläche diffusor	
Material	UV beständiges Polycarbonat
Farbe	Transparent

Cables Electrification	
Cable connector	No connector - Neoprene 3x1mm²

Linea Light Group reserves the right, without any advance notice, to change the characteristics of their products, as well as the availability of the same at any time. No product, relative technical data, illustrations and information are binding for Linea Light Group. Linea Light Group will not be held liable for any illustration, text and/or translation\ errors. All values indicated are measured values. There is a +/- 10% tolerance for the flow, CCT and power data.

Deckenleuchten - Industriebeleuchtung | 198-264 V AC /176-280 V DC | 96 topLED 49 W DC - 54 W AC | CRI 80
84422N00

Single emission ceiling downlights for indoor application. The natural white LED light source with a diffused light distribution is composed of 96 powerled LEDs with CCT of 4000 K and a CRI 80; the source luminous flux is 8057 lm, with a 164.4 lm/W nominal luminous efficacy.

The device body is made of aluminium alloy 6060 and features a anodised aluminium finish, processed by means of 20 µm anodizing; the diffuser is made of uv resistant polycarbonate. Surface treatment of the product body with chemical conversion of aluminum, designed to ensure maximum long?term resistance.

The ingress protection degree is IP65; the total weight is of 14.8 kg.

The total absorbed power is 54 W The power supply cable is included and features a 1 m length.

The device features protection class I and can be ceiling-mounted.

Compliant with the EN 60598-1 standard and its specific provisions.

Energieeffizienzklasse
Dieses Produkt enthält 4 Lichtquellen der Energieeffizienzklasse E.

Illuminotechnical Eigenschaften	
Light Output Ratio (LOR)	42 %
Lichtstrom (Lichtquelle)	8057 lm
Leuchten Lichtstrom	3458 lm
Consumption	54 W
Leuchten Lichtausbeute	64 lm/W
Farbtemperatur	4000 K
Standard Deviation of Colour Matching	3 Step MacAdam
Farbwiedergabeindex	80 Ra
Standardumgebungstemperatur	-25 / +45°C

LED Life / Failure Ratio
L70 B10 C0 366369h
L80 B10 C0 230187h
L90 B10 C0 110067h

UGR	
UGR axial	26.8
UGR transversal	27.6
X=4H | Y=8H	S=0.25H
Reflection factor	70/50/20

OPTICAL	
Optik C90/C270	115°
Optik C0/C180	122°
Light distribution simmetry	Symmetrical 2 assis

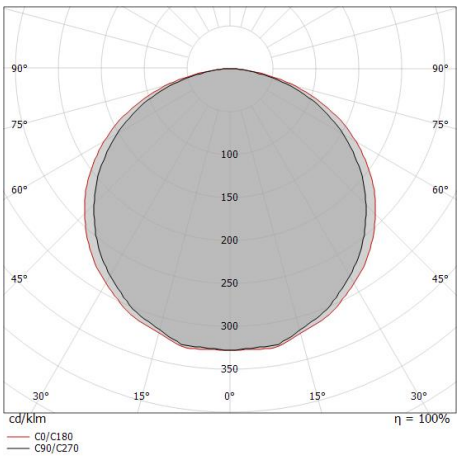

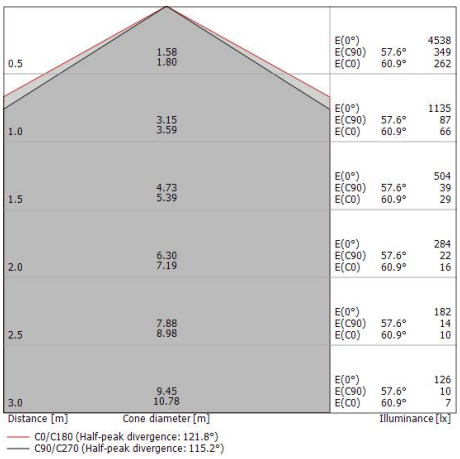

Linea Light Group reserves the right, without any advance notice, to change the characteristics of their products, as well as the availability of the same at any time. No product, relative technical data, illustrations and information are binding for Linea Light Group. Linea Light Group will not be held liable for any illustration, text and/or translation\ errors. All values indicated are measured values. There is a +/- 10% tolerance for the flow, CCT and power data.

Alux | Industrial Lighting | Accessories
84422N00

Kabel

Typ Kabel power cable; Länge 1000 mm; isolierung einzeln; querschnitt 1 mm²; kabelklemme: pg7; farben: blau - braun - gelb-grün.

Code
84863

Stecker

Typ Kabel power cable; ; isolierung einzeln; querschnitt 1 mm²; kabelklemme: ja; farben: blau - braun - gelb-grün.

Code
99737

Linea Light Group reserves the right, without any advance notice, to change the characteristics of their products, as well as the availability of the same at any time. No product, relative technical data, illustrations and information are binding for Linea Light Group. Linea Light Group will not be held liable for any illustration, text and/or translation\ errors. All values indicated are measured values. There is a +/- 10% tolerance for the flow, CCT and power data.