# Periskop60

Scheinwerfer | 180-264 V AC /230-280 V DC
1 arrayLED 6.7 W DC - 8.7 W AC | CRI 80
**84235M15**



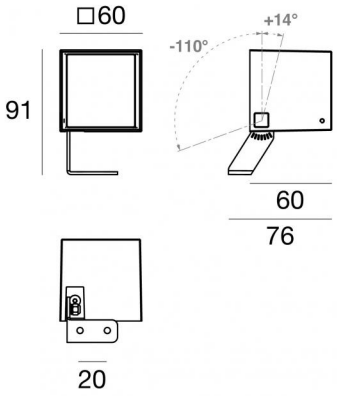


| Technische Daten | |
|---|---|
| Typ | Oberfläche |
| Installationsposition | Wand - Decke - Boden |
| Installationsumgebung | Outdoor |
| Lichtquelle | LED |
| Circuit structure | arrayLED |
| Optik | Spot |
| Light emission direction | frontal |
| Lampe Nennleistung | 6.7 W DC |
| Gesamtleistung | 8.7 W |
| Lichtstrom (Lichtquelle) | 849 lm |
| Nominale Eingangsspannung | 220 - 240 V AC |
| Eingangsspannungsbereich | 180 - 264 V AC |
| Frequency | 50 - 60 Hz |
| Ähnlichste Farbtemperatur / Tone | 2700 K |
| Farbwiedergabeindex | 80 Ra |
| Gleichstrom/Gleichspannung | AC |
| Isolierklasse | 2 |
| IP | IP66 |
| IK | IK05 |
| Glühdrahtprüfung | 850° |
| Direkte Montage auf normal entflammbaren Oberflächen | Ja |
| CE | Ja |
| Einschließlich Driver | Driver |
| Leuchte dimmbar | Nein |
| Schwenkbarkeit | Orientabile |
| Gesamtwinkel (vertikale Ebene) | 124 ° |
| Drehbarkeit | Nein |
| Begehbarkeit | Nein |
| Überrollbarkeit | Nein |
| Einschließlich Kabel | Ja |
| Kabellänge | 1 m |
| Harzbeschichtung | Nein |
| Typ Lichtabstrahlung | Einflammig |
| Nettogewicht | 0.325 Kg |
| Schutz vor elektrostatischen Entladungen | Ja |
| Schutz vor Stoßspannungen | 1 KV |

| Oberfläche Oberfläche Gehäuse | |
|---|---|
| Material | Stranggepresstes Aluminium EN AB - 46100 |
| Farbe | Text brilliant grey RAL 9006 |
| Bearbeitungstyp | Offenporige Anodisierung + Pulverlackierung |

| Oberfläche Oberfläche diffusor | |
|---|---|
| Material | Extra-helles Glas - Gehärtet |
| Farbe | transparent |
| Bearbeitungstyp | Siebdruck |

| Oberfläche Oberfläche bügel | |
|---|---|
| Material | Stahl AISI 304 |
| Farbe | Text black RAL9005 |
| Bearbeitungstyp | Pulverbeschichtung mit duroplastischen Pulvern |

| Cables Electrification | |
|---|---|
| Cable connector | No |



Linea Light Group reserves the right, without any advance notice, to change the characteristics of their products, as well as the availability of the same at any time. No product, relative technical data, illustrations and information are binding for Linea Light Group. Linea Light Group will not be held liable for any illustration, text and/or translation\ errors. All values indicated are measured values. There is a +/- 10% tolerance for the flow, CCT and power data.

Scheinwerfer | 180-264 V AC /230-280 V DC | 1 arrayLED 6.7 W DC - 8.7 W AC | CRI 80
**84235M15**

Single emission projectors for outdoor application. The super warm white LED light source with a spot light distribution is composed of 1 arrayled LEDs with CCT of 2700 K and a CRI 80; the source luminous flux is 849 lm, with a 126.7 lm/W nominal luminous efficacy.

Product suitable for installations in coastal areas with high salinity and strong exposure to atmospheric agents.

The device body is made of die-cast aluminium en ab - 46100 and features a text brilliant grey ral 9006 finish, processed by means of open pore anodizing + powder coating; the diffuser is made of extra clear glass - tempered with a silk-screening treatment. Surface treatment of the product body through aluminum chemical conversion, followed by polyester powder coating, using exclusively coatings compliant with the Qualicoat standard.

The ingress protection degree is IP66; the total weight is of 0.325 kg.

The total absorbed power is 8.7 W The power supply cable is included and features a 1 m length.

The device features protection class II and can be wall lights, ceiling or floor-mounted.

Compliant with the EN 60598-1 standard and its specific provisions.

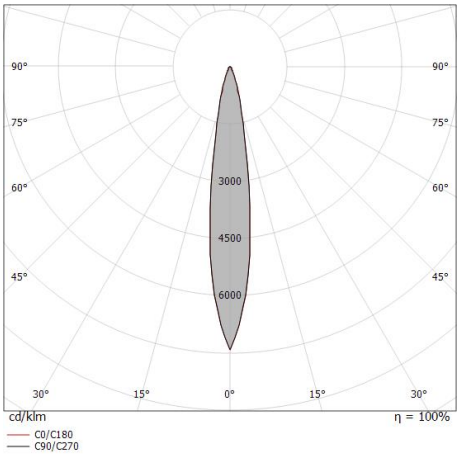


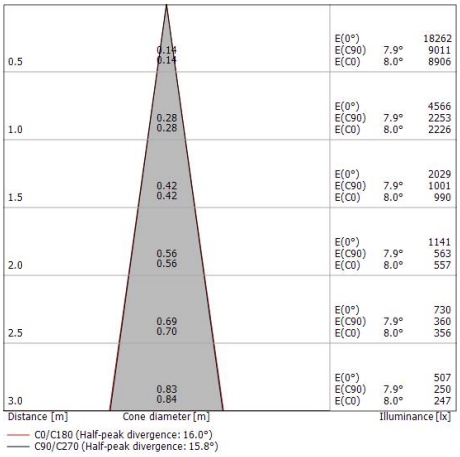


| Energieeffizienzklasse |
|---|
| Dieses Produkt enthält eine Lichtquelle der Energieeffizienzklasse F. |

| Illuminotechnical Eigenschaften | |
|---|---|
| Light Output Ratio (LOR) | 72 % |
| Lichtstrom (Lichtquelle) | 849 lm |
| Leuchten Lichtstrom | 616 lm |
| Consumption | 8.7 W |
| Leuchten Lichtausbeute | 70 lm/W |
| Farbtemperatur | 2700 K |
| Standard Deviation of Colour Matching | 3 Step MacAdam |
| Farbwiedergabeindex | 80 Ra |
| Standardumgebungstemperatur | -20 / +50°C |
| Typische Temperatur am Glas | 50°C |

| LED Life / Failure Ratio |
|---|
| L70 B10 C0 314051h (at Tj 65 Ta 25 ) |
| L80 B10 C0 196584h (at Tj 65 Ta 25 ) |
| L90 B10 C0 92791h (at Tj 65 Ta 25 ) |

| UGR | |
|---|---|
| UGR axial | 22.5 |
| UGR transversal | 22.6 |
| X=4H \| Y=8H | S=0.25H |
| Reflection factor | 70/50/20 |

| OPTICAL | |
|---|---|
| Optik C0/C180 | 16° |
| Light distribution simmetry | Symmetrical |



Linea Light Group reserves the right, without any advance notice, to change the characteristics of their products, as well as the availability of the same at any time. No product, relative technical data, illustrations and information are binding for Linea Light Group. Linea Light Group will not be held liable for any illustration, text and/or translation\ errors. All values indicated are measured values. There is a +/- 10% tolerance for the flow, CCT and power data.

Periskop60 | Projectors | Accessories
**84235M15**

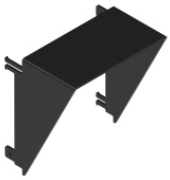

Blendschutz
Blendschutzart: palpebra.
Material:Stahl AISI 304, farbe:Text black RAL9005, bearbeitungstyp :Pulverbeschichtung mit duroplastischen Pulvern.

**Code**
83245



Erdspießen
installationsposition: terreno,Material Verkleidung: pc

**Code**
89371




Erdspießen - L. 160mm
installationsposition: terreno,Material Verkleidung: stahl aisi 304

**Code**
98624

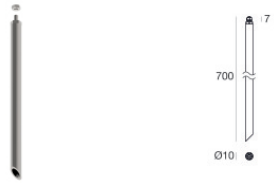


Erdspießen - L. 700mm
installationsposition: terreno,Material Verkleidung: stahl aisi 304

**Code**
C-F500002




Erdspießen - L. 1000mm
installationsposition: terreno,Material Verkleidung: stahl aisi 304

**Code**
C-F500003



Linea Light Group reserves the right, without any advance notice, to change the characteristics of their products, as well as the availability of the same at any time. No product, relative technical data, illustrations and information are binding for Linea Light Group. Linea Light Group will not be held liable for any illustration, text and/or translation\ errors. All values indicated are measured values. There is a +/- 10% tolerance for the flow, CCT and power data.