Woofer_R

Downlights | 100-240 V | 1 arrayLED 13 W DC 350 mA
CRI 92
84230W20



KIT
LED lamp + Driver



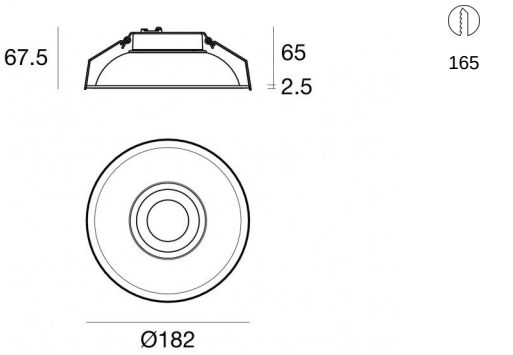

Technische Daten	
Installationsposition	Decke
Installationsumgebung	Indoor
Lichtquelle	LED
Circuit structure	arrayLED
Optik	Spot
Light emission direction	downward
Lampe Nennleistung	13 W DC
Lichtstrom (Lichtquelle)	1385 lm
Nominale Eingangsspannung	220 - 240 V AC
Eingangsspannungsbereich	350mA
Frequency	50 - 60 Hz
Ähnlichste Farbtemperatur / Tone	3000 K
Farbwiedergabeindex	92 Ra
Gleichstrom/Gleichspannung	CC
Isolierklasse	3
IP	IP44
IK	IK08
Glühdrahtprüfung	850°
Direkte Montage auf normal entflammbaren Oberflächen	Ja
CE	Ja
Einschließlich Driver	Driver
Leuchte dimmbar	Nein
Schwenkbarkeit	Nein
Drehbarkeit	Nein
Begehbarkeit	Nein
Überrollbarkeit	Nein
Einschließlich Kabel	Ja
Kabellänge	0.30 m
Harzbeschichtung	Nein
Einbautiefe	65 mm
Typ Lichtabstrahlung	Einflammig
Nettogewicht	0.196 Kg
Schutz vor elektrostatischen Entladungen	Nein
Schutz vor Stoßspannungen	Nein

Oberfläche Oberfläche Gehäuse	
Material	Aluminium
Farbe	Text white RAL9003
Bearbeitungstyp	Lackierung

Elektronik im Kit enthalten

83185
On/Off Driver 100~240V AC (1 art.)
Elektrische Isolationsklasse 2



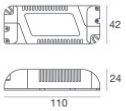

Linea Light Group reserves the right, without any advance notice, to change the characteristics of their products, as well as the availability of the same at any time. No product, relative technical data, illustrations and information are binding for Linea Light Group. Linea Light Group will not be held liable for any illustration, text and/or translation\ errors. All values indicated are measured values. There is a +/- 10% tolerance for the flow, CCT and power data.

Downlights | 100-240 V | 1 arrayLED 13 W DC 350 mA | CRI 92
84230W20

Single emission recessed downlights for indoor application. The warm white LED light source with a spot light distribution is composed of 1 arrayled LEDs with CCT of 3000 K and a CRI 92; the source luminous flux is 1385 lm, with a 106.5 lm/W nominal luminous efficacy.

The device body is made of aluminium and features a text white ral9003 finish, processed by means of coating.

The ingress protection degree is IP44; the total weight is of 0.196 kg.

The total absorbed power is 15 W The power supply cable is included and features a 0.30 m length.

The device features protection class III and can be ceiling-mounted, with a 165 mm diameter hole (in plasterboard).

Compliant with the EN 60598-1 standard and its specific provisions.

Energieeffizienzklasse
Dieses Produkt enthält eine Lichtquelle der Energieeffizienzklasse F.

Illuminotechnical Eigenschaften	
Light Output Ratio (LOR)	65 %
Lichtstrom (Lichtquelle)	1385 lm
Leuchten Lichtstrom	911 lm
Consumption	15 W
Leuchten Lichtausbeute	60 lm/W
Farbtemperatur	3000 K
Standard Deviation of Colour Matching	2 Step MacAdam
Farbwiedergabeindex	92 Ra
Black Body Locus	On
Standardumgebungstemperatur	-20 / +50°C
Typische Temperatur am Glas	40°C

LED Life / Failure Ratio
L70 B10 C0 102000h (at Tj 65 Ta 25)
L90 B10 C0 55000h

UGR	
UGR axial	14.7
UGR transversal	14.8
X=4H | Y=8H	S=0.25H
Reflection factor	70/50/20

OPTICAL	
Optik C0/C180	16°
Light distribution simmetry	Symmetrical

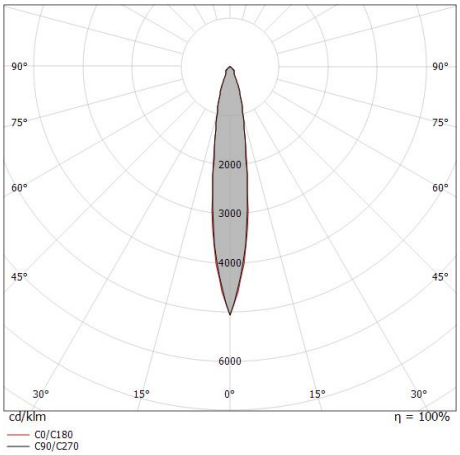

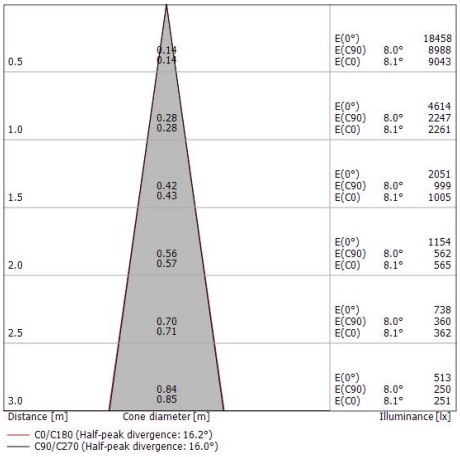

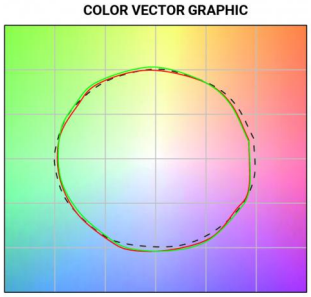

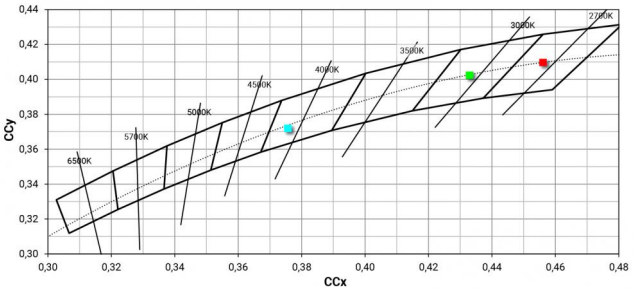

Linea Light Group reserves the right, without any advance notice, to change the characteristics of their products, as well as the availability of the same at any time. No product, relative technical data, illustrations and information are binding for Linea Light Group. Linea Light Group will not be held liable for any illustration, text and/or translation\ errors. All values indicated are measured values. There is a +/- 10% tolerance for the flow, CCT and power data.