Downlights | 9 x powerLEDs 8 W DC 700 mA | CRI 90
Dynamisches weiß
**84154D30**



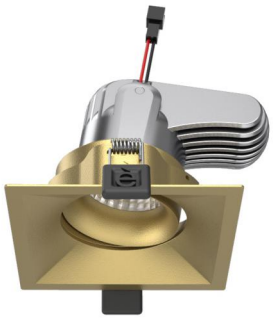

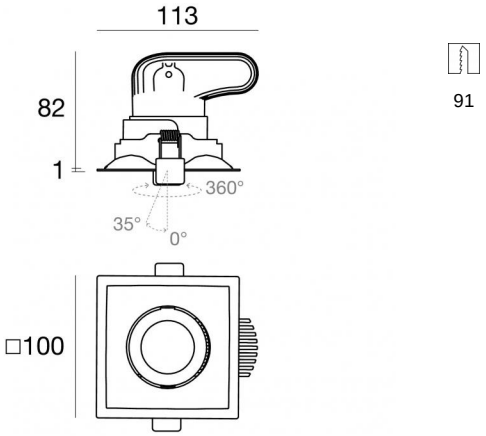


| Technische Daten | |
|---|---|
| Installationsposition | Decke |
| Installationsumgebung | Indoor |
| Lichtquelle | LED |
| Circuit structure | powerLEDs |
| Optik | Medium Flood |
| Light emission direction | downward |
| Lampe Nennleistung | 8 W DC |
| Eingangsspannungsbereich | 700mA |
| Lichtstrom (Lichtquelle) 2700K | 1005 lm |
| Minimale Farbtemperatur | 2700 K |
| Lichtstrom (Lichtquelle) 5700K | 980 lm |
| Maximale Farbtemperatur | 5700 K |
| Ähnlichste Farbtemperatur / Tone | Dynamisches weiß |
| Farbwiedergabeindex | 90 Ra |
| Gleichstrom/Gleichspannung | CC |
| Isolierklasse | 3 |
| IP | IP44 |
| IP optisches System | IP65 |
| IK | IK08 |
| Glühdrahtprüfung | 850° |
| Direkte Montage auf normal entflammbaren Oberflächen | Ja |
| CE | Ja |
| Einschließlich Driver | Nein |
| Leuchte dimmbar | Ja |
| Schwenkbarkeit | Nein |
| Drehbarkeit | Ja |
| Gesamtwinkel (horizontale Ebene) | 350 ° |
| Gesamtwinkel (vertikale Ebene) | 35 ° |
| Begehbarkeit | Nein |
| Überrollbarkeit | Nein |
| Einschließlich Kabel | Ja |
| Kabellänge | 0.300 m |
| Harzbeschichtung | Nein |
| Einbautiefe | 82 mm |
| Typ Lichtabstrahlung | Einflammig |
| Nettogewicht | 0.350 Kg |
| Schutz vor elektrostatischen Entladungen | Nein |
| Schutz vor Stoßspannungen | Nein |

| Oberfläche Oberfläche Gehäuse | |
|---|---|
| Material | Stranggepresstes Aluminium EN AB - 46100 |
| Farbe | Polished (galvanic) gold |
| Bearbeitungstyp | Pulverbeschichtung mit duroplastischen Pulvern |

| Oberfläche Oberfläche diffusor | |
|---|---|
| Material | UV beständiges Polycarbonat |
| Farbe | Transparent |

| Oberfläche Oberfläche strahler | |
|---|---|
| Material | Stranggepresstes Aluminium EN AB - 46100 |
| Farbe | Aluminium |
| Bearbeitungstyp | Polieren |

**Elektronik**



99333
DMX Multi Channel and Power 4ch. 24~48V DC (- art.)



83159
DALI-2 - DALI DT8 - NFC Multi Channel 198~264V AC (2 - 3 art.)



Linea Light Group reserves the right, without any advance notice, to change the characteristics of their products, as well as the availability of the same at any time. No product, relative technical data, illustrations and information are binding for Linea Light Group. Linea Light Group will not be held liable for any illustration, text and/or translation\ errors. All values indicated are measured values. There is a +/- 10% tolerance for the flow, CCT and power data.

Downlights | 9 x powerLEDs 8 W DC 700 mA | CRI 90 | Dynamisches weiß
**84154D30**

Single emission recessed downlights for indoor application. The dynamic white LED light source with a medium flood light distribution is composed of 9 powerleds LEDs with CCT of From 2700 to 5700 K and a CRI 90.

The device body is made of die-cast aluminium en ab - 46100 and features a polished (galvanic) gold finish, processed by means of powder coating with thermosetting powders; the diffuser is made of uv resistant polycarbonate.

The ingress protection degree is IP44; the total weight is of 0.350 kg. The power supply driver is not provided and is to be ordered separately.

The total absorbed power is 8 W The power supply cable is included and features a 0.300 m length.

The device features protection class III and can be ceiling-mounted, with a 91 x 91 mm hole (in plasterboard).

Compliant with the EN 60598-1 standard and its specific provisions.

| **Energieeffizienzklasse** |
|---|
| Dieses Produkt enthält eine Lichtquelle der Energieeffizienzklasse F. |

| **Illuminotechnical Eigenschaften** | |
|---|---|
| Standard Deviation of Colour Matching | 3 Step MacAdam |
| Farbwiedergabeindex | 90 Ra |
| Standardumgebungstemperatur | -20 / +50°C |
| Typische Temperatur am Glas | 40°C |

| **LED Life / Failure Ratio** |
|---|
| L70 B10 C0 969025h (at Tj 65  Ta 25 ) |
| L80 B10 C0 608508h (at Tj 65  Ta 25 ) |
| L90 B10 C0 290509h (at Tj 65  Ta 25 ) |



Linea Light Group reserves the right, without any advance notice, to change the characteristics of their products, as well as the availability of the same at any time. No product, relative technical data, illustrations and information are binding for Linea Light Group. Linea Light Group will not be held liable for any illustration, text and/or translation\ errors. All values indicated are measured values. There is a +/- 10% tolerance for the flow, CCT and power data.