Poller & Mastaufsatzleuchten
180-264 V AC /230-280 V DC | 3 x powerLED 4.5 W DC - 5.5 W AC | CRI 90
83879M20

MARINE GRADE



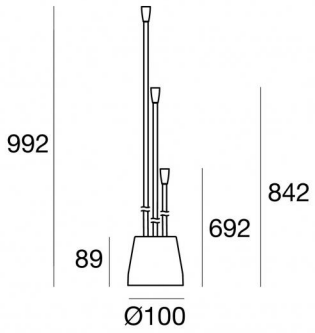

Technische Daten	
Typ	Poller
Installationsposition	Boden
Installationsumgebung	Outdoor
Lichtquelle	LED
Circuit structure	powerLED
Optik	Flood
Light emission direction	frontal
Lampe Nennleistung	4.5 W DC
Gesamtleistung	5.5 W
Lichtstrom (Lichtquelle)	510 lm
Nominale Eingangsspannung	220 - 240 V AC
Eingangsspannungsbereich	180 - 264 V AC
Frequency	50 - 60 Hz
Ähnlichste Farbtemperatur / Tone	2700 K
Farbwiedergabeindex	90 Ra
Gleichstrom/Gleichspannung	AC
Isolierklasse	2
IP	IP65
IK	IK08
Glühdrahtprüfung	650°
Direkte Montage auf normal entflammbaren Oberflächen	Ja
CE	Ja
Einschließlich Driver	Driver
Leuchte dimmbar	Nein
Schwenkbarkeit	Orientabile tramite flessibile
Drehbarkeit	Nein
Begehbarkeit	Nein
Überrollbarkeit	Nein
Einschließlich Kabel	Nein
Harzbeschichtung	Ja
Typ Lichtabstrahlung	Mehrflammig
Nettogewicht	0.45 Kg
Schutz vor elektrostatischen Entladungen	Ja
Schutz vor Stoßspannungen	1 KV

Oberfläche Oberfläche Gehäuse	
Farbe	Braun

Oberfläche Oberfläche diffusor	
Material	Silikonharz
Farbe	Weiß matt

Oberfläche Oberfläche sockel	
Material	Kunststoff ABS
Farbe	Braun
Bearbeitungstyp	Lackierung

Linea Light Group reserves the right, without any advance notice, to change the characteristics of their products, as well as the availability of the same at any time. No product, relative technical data, illustrations and information are binding for Linea Light Group. Linea Light Group will not be held liable for any illustration, text and/or translation\ errors. All values indicated are measured values. There is a +/- 10% tolerance for the flow, CCT and power data.

Poller & Mastaufsatzleuchten | 180-264 V AC /230-280 V DC | 3 x powerLED 4.5 W DC - 5.5 W AC | CRI 90

83879M20

Multiple emission bollard & pole for outdoor application. The super warm white LED light source with a flood light distribution is composed of 3 powerled LEDs with CCT of 2700 K and a CRI 90; the source luminous flux is 510 lm, with a 113.3 lm/W nominal luminous efficacy.

Product suitable for installations in coastal areas with high salinity and strong exposure to atmospheric agents.

The device body and features a brown finish; the diffuser is made of silicone resin.

The ingress protection degree is IP65; the total weight is of 0.45 kg.

The total absorbed power is 5.5 W

The device features protection class II and can be floor-mounted.

Compliant with the EN 60598-1 standard and its specific provisions.

Energieeffizienzklasse
Dieses Produkt enthält 3 Lichtquellen der Energieeffizienzklasse F.

Illuminotechnical Eigenschaften	
Lichtstrom (Lichtquelle)	510 lm
Farbtemperatur	2700 K
Standard Deviation of Colour Matching	3 Step MacAdam
Farbwiedergabeindex	90 Ra
Standardumgebungstemperatur	-20 / +50°C

LED Life / Failure Ratio
L70 B10 C0 214455h (at Tj 65 Ta 25)
L80 B10 C0 136355h (at Tj 65 Ta 25)
L90 B10 C0 67466h (at Tj 65 Ta 25)

Linea Light Group reserves the right, without any advance notice, to change the characteristics of their products, as well as the availability of the same at any time. No product, relative technical data, illustrations and information are binding for Linea Light Group. Linea Light Group will not be held liable for any illustration, text and/or translation\ errors. All values indicated are measured values. There is a +/- 10% tolerance for the flow, CCT and power data.

Blum | Bollard & Pole | Accessories
83879M20



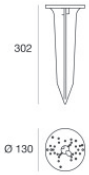

Erdspießen

installationsposition: terreno,Material Verkleidung: uv beständiges polycarbonat

Code

14931

Linea Light Group reserves the right, without any advance notice, to change the characteristics of their products, as well as the availability of the same at any time. No product, relative technical data, illustrations and information are binding for Linea Light Group. Linea Light Group will not be held liable for any illustration, text and/or translation\ errors. All values indicated are measured values. There is a +/- 10% tolerance for the flow, CCT and power data.