Scheinwerfer - Industriebeleuchtung | 198-264 V
2 arrayLED 65 W DC - 72 W AC | CRI 80
83851W30



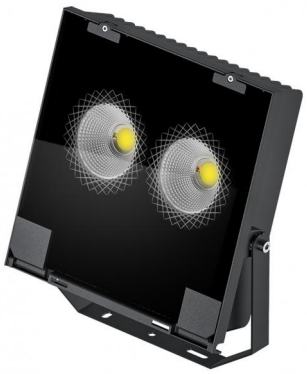

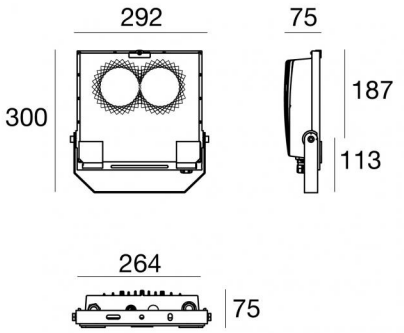

Technische Daten	
Typ	Oberfläche - Industriebeleuchtung
Installationsposition	Wand - Decke - Boden
Installationsumgebung	Outdoor
Lichtquelle	LED
Circuit structure	arrayLED
Optik	Flood
Light emission direction	frontal
Lampe Nennleistung	65 W DC
Gesamtleistung	72 W
Lichtstrom (Lichtquelle)	9313 lm
Nominale Eingangsspannung	220 - 240 V AC
Eingangsspannungsbereich	198 - 264 V AC
Frequency	50 - 60 Hz
Ähnlichste Farbtemperatur / Tone	3000 K
Farbwiedergabeindex	80 Ra
Gleichstrom/Gleichspannung	AC
Isolierklasse	1
IP	IP66
IK	IK08
Glühdrahtprüfung	850°
Direkte Montage auf normal entflammbaren Oberflächen	Ja
CE	Ja
Einschließlich Driver	Driver
Leuchte dimmbar	Nein
Schwenkbarkeit	Orientabile
Gesamtwinkel (vertikale Ebene)	180 °
Drehbarkeit	Nein
Begehbarkeit	Nein
Überrollbarkeit	Nein
Einschließlich Kabel	Ja
Kabellänge	1 m
Harzbeschichtung	Nein
Typ Lichtabstrahlung	Einflammig
Nettogewicht	3.8 Kg
Schutz vor elektrostatischen Entladungen	Ja
Schutz vor Stoßspannungen	5 KV
Technische Merkmale des Produkts	TCS

Oberfläche Oberfläche Gehäuse	
Material	Stranggepresstes Aluminium EN AB - 46100
Farbe	Text black RAL9005
Bearbeitungstyp	Offenporige Anodisierung + Pulverlackierung

Oberfläche Oberfläche diffusor	
Material	Extra-helles Glas - Gehärtet
Farbe	transparent
Bearbeitungstyp	Siebdruck

Oberfläche Oberfläche bügel	
Material	Stahl AISI 304
Farbe	Stahl

Cables Electrification	
IP (locked condition)	68
Cable connector	Female Socket 3 Pin

IP (locked condition)	68
Cable connector	Male Plug 3 pin

Linea Light Group reserves the right, without any advance notice, to change the characteristics of their products, as well as the availability of the same at any time. No product, relative technical data, illustrations and information are binding for Linea Light Group. Linea Light Group will not be held liable for any illustration, text and/or translation\ errors. All values indicated are measured values. There is a +/- 10% tolerance for the flow, CCT and power data.

Scheinwerfer - Industriebeleuchtung | 198-264 V | 2 arrayLED 65 W DC - 72 W AC | CRI 80

83851W30

Single emission projectors for outdoor application. The warm white LED light source with a flood light distribution is composed of 2 arrayled LEDs with CCT of 3000 K and a CRI 80; the source luminous flux is 9313 lm, with a 143.3 lm/W nominal luminous efficacy.

The device body is made of die-cast aluminium en ab - 46100 and features a text black ral9005 finish, processed by means of open pore anodizing + powder coating; the diffuser is made of extra clear glass - tempered with a silk-screening treatment. Surface treatment of the product body through aluminum chemical conversion, followed by polyester powder coating, using exclusively coatings compliant with the Qualicoat standard.

The ingress protection degree is IP66; the total weight is of 3.8 kg.

The total absorbed power is 72 W The power supply cable is included and features a 1 m length.

The device features protection class I and can be wall lights, ceiling or floor-mounted.

Compliant with the EN 60598-1 standard and its specific provisions.

Energieeffizienzklasse
Dieses Produkt enthält 2 Lichtquellen der Energieeffizienzklasse E.

Illuminotechnical Eigenschaften	
Light Output Ratio (LOR)	74 %
Lichtstrom (Lichtquelle)	9313 lm
Leuchten Lichtstrom	6938 lm
Consumption	72 W
Leuchten Lichtausbeute	96 lm/W
Farbtemperatur	3000 K
Standard Deviation of Colour Matching	2 Step MacAdam
Farbwiedergabeindex	80 Ra
Black Body Locus	On
Standardumgebungstemperatur	-20 / +50°C
Typische Temperatur am Glas	40°C

LED Life / Failure Ratio
L70 B10 C0 252000h (at Tj 65 Ta 25)

UGR	
UGR axial	8.9
UGR transversal	9.1
X=4H | Y=8H	S=0.25H
Reflection factor	70/50/20

OPTICAL	
Optik C0/C180	25°
Light distribution simmetry	Symmetrical

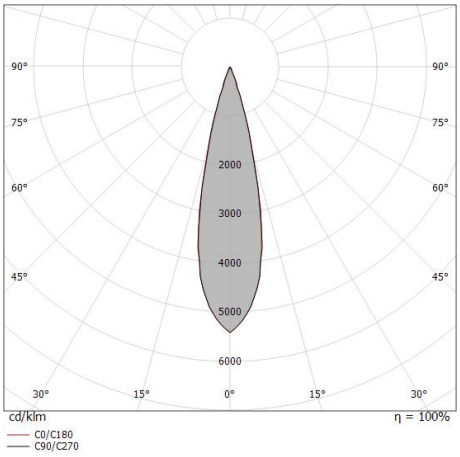

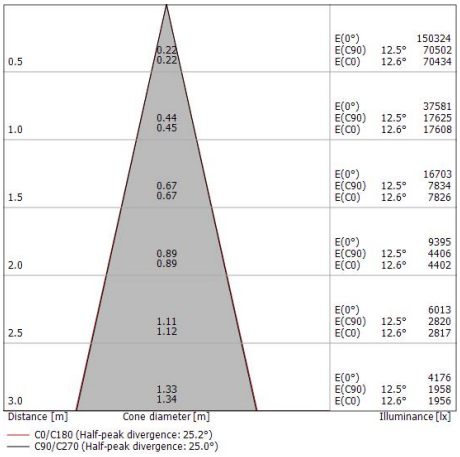

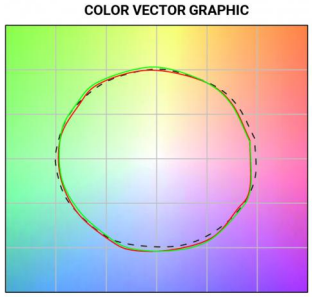

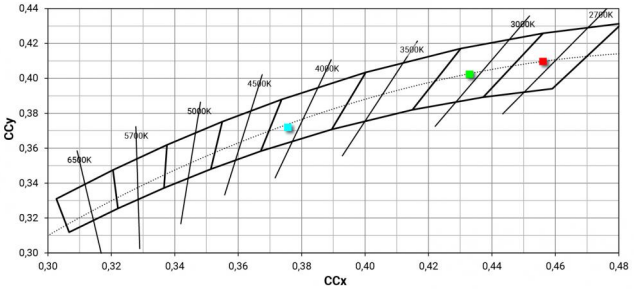

Linea Light Group reserves the right, without any advance notice, to change the characteristics of their products, as well as the availability of the same at any time. No product, relative technical data, illustrations and information are binding for Linea Light Group. Linea Light Group will not be held liable for any illustration, text and/or translation\ errors. All values indicated are measured values. There is a +/- 10% tolerance for the flow, CCT and power data.