Quara_R

Step-Leuchten | 198-264 V AC /186-275 V DC
1 x powerLED 2 W DC - 3 W AC | CRI 80
83579W70

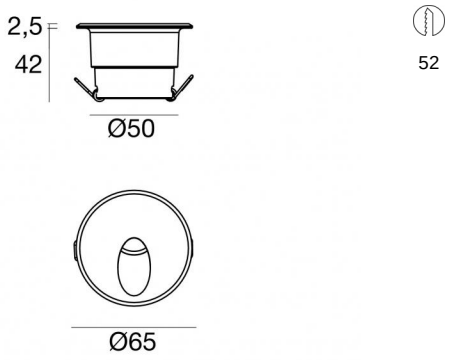

Technische Daten	
Typ	Step-Leuchten
Installationsposition	Wand
Installationsumgebung	Outdoor
Lichtquelle	LED
Circuit structure	powerLED
Optik	Asymmetric Wallwasher
Light emission direction	downward
Lampe Nennleistung	2 W DC
Gesamtleistung	3 W
Lichtstrom (Lichtquelle)	249 lm
Nominale Eingangsspannung	220 - 240 V AC
Eingangsspannungsbereich	198 - 264 V AC
Frequency	50 - 60 Hz
Ähnlichste Farbtemperatur / Tone	3000 K
Farbwiedergabeindex	80 Ra
Gleichstrom/Gleichspannung	AC
Isolierklasse	2
IP	IP65
Glühdrahtprüfung	850°
Direkte Montage auf normal entflammbaren Oberflächen	Ja
CE	Ja
Einschließlich Driver	Driver
Leuchte dimmbar	Nein
Schwenkbarkeit	Nein
Drehbarkeit	Nein
Begehbarkeit	Nein
Überrollbarkeit	Nein
Einschließlich Kabel	Ja
Kabellänge	1 m
Harzbeschichtung	Ja
Einbautiefe	42 mm
Typ Lichtabstrahlung	Einflammig
Nettogewicht	0.2 Kg
Schutz vor elektrostatischen Entladungen	Ja
Schutz vor Stoßspannungen	1 KV

Oberfläche Oberfläche Gehäuse	
Material	Aluminium
Farbe	Text white RAL9003
Bearbeitungstyp	Offenporige Anodisierung + Pulverlackierung

Oberfläche Oberfläche diffusor	
Material	Extra-helles Glas
Farbe	Transparent

Cables Electrification	
Cable connector	No connector - Neoprene 2x1mm²

Linea Light Group reserves the right, without any advance notice, to change the characteristics of their products, as well as the availability of the same at any time. No product, relative technical data, illustrations and information are binding for Linea Light Group. Linea Light Group will not be held liable for any illustration, text and/or translation\ errors. All values indicated are measured values. There is a +/- 10% tolerance for the flow, CCT and power data.

Step-Leuchten | 198-264 V AC /186-275 V DC | 1 x powerLED 2 W DC - 3 W AC | CRI 80
83579W70

Single emission for outdoor application. The warm white LED light source with a asymmetric wallwasher light distribution is composed of 1 powerled LEDs with CCT of 3000 K and a CRI 80; the source luminous flux is 249 lm, with a 124.5 lm/W nominal luminous efficacy.

The device body is made of aluminium and features a text white ral9003 finish, processed by means of open pore anodizing + powder coating; the diffuser is made of extra clear glass. Surface treatment of the product body through aluminum chemical conversion, followed by polyester powder coating, using exclusively coatings compliant with the Qualicoat standard.

The ingress protection degree is IP65; the total weight is of 0.2 kg.

The total absorbed power is 3 W The power supply cable is included and features a 1 m length.

The device features protection class II and can be wall lights-mounted, with a 52 mm diameter hole (in plasterboard) with an outer casing, code 84338(for concrete or masonry).

Compliant with the EN 60598-1 standard and its specific provisions.

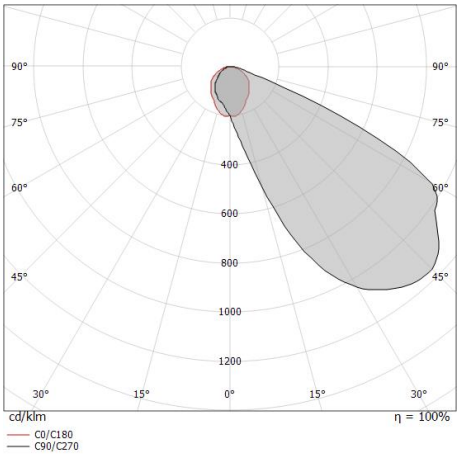

Energieeffizienzklasse
Dieses Produkt enthält eine Lichtquelle der Energieeffizienzklasse D.

Illuminotechnical Eigenschaften	
Light Output Ratio (LOR)	62 %
Lichtstrom (Lichtquelle)	249 lm
Leuchten Lichtstrom	156 lm
Consumption	3 W
Leuchten Lichtausbeute	52 lm/W
Farbtemperatur	3000 K
Standard Deviation of Colour Matching	1.5 Step
Farbwiedergabeindex	80 Ra
Standardumgebungstemperatur	-20 / +50°C
Typische Temperatur am Glas	50°C

LED Life / Failure Ratio
L70 B10 C0 1240219h (at Tj 65 Ta 25)
L80 B10 C0 745627h (at Tj 65 Ta 25)
L90 B10 C0 309367h (at Tj 65 Ta 25)

OPTICAL	
Optik C0/C180	99°
Light distribution simmetry	Asymmetrical

Linea Light Group reserves the right, without any advance notice, to change the characteristics of their products, as well as the availability of the same at any time. No product, relative technical data, illustrations and information are binding for Linea Light Group. Linea Light Group will not be held liable for any illustration, text and/or translation\ errors. All values indicated are measured values. There is a +/- 10% tolerance for the flow, CCT and power data.

Quara_R | Step Lights | Accessories
83579W70

Einbaugehäuse
installationsposition: wand; typ installation: mauerwerk L=72mm, H=62mm, D=62mm.
Material:Kunststoff ABS, farbe:Black.

Code
84338

Linea Light Group reserves the right, without any advance notice, to change the characteristics of their products, as well as the availability of the same at any time. No product, relative technical data, illustrations and information are binding for Linea Light Group. Linea Light Group will not be held liable for any illustration, text and/or translation\ errors. All values indicated are measured values. There is a +/- 10% tolerance for the flow, CCT and power data.