Beret_2R

Uplights | CRI 80
83569W60

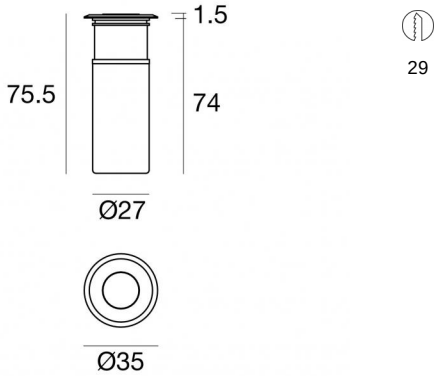

Technische Daten	
Typ	Begehbar
Installationsposition	Wand - Boden
Installationsumgebung	Outdoor
Lichtquelle	LED
Circuit structure	powerLED
Optik	Wide Flood
Light emission direction	upward
Lampe Nennleistung	1.6 W DC
Gesamtleistung	3 W
Lichtstrom (Lichtquelle)	249 lm
Nominale Eingangsspannung	220 - 240 V AC
Eingangsspannungsbereich	198 - 264 V AC
Frequency	50 - 60 Hz
Ähnlichste Farbtemperatur / Tone	3000 K
Farbwiedergabeindex	80 Ra
Gleichstrom/Gleichspannung	AC
Isolierklasse	2
IP	IP67
IK	IK10
Glühdrahtprüfung	850°
Direkte Montage auf normal entflammbaren Oberflächen	Ja
CE	Ja
Einschließlich Driver	Driver
Leuchte dimmbar	Nein
Schwenkbarkeit	Nein
Drehbarkeit	Nein
Begehbarkeit	Ja
Überrollbarkeit	2000 Kg
Einschließlich Kabel	Ja
Kabellänge	1 m
Harzbeschichtung	Ja
Einbautiefe	74 mm
Typ Lichtabstrahlung	Einflammig
Nettogewicht	0.230 Kg
Schutz vor elektrostatischen Entladungen	Ja
Schutz vor Stoßspannungen	1 KV
Technische Merkmale des Produkts	Acquastop

Oberfläche Oberfläche Gehäuse	
Material	Messing OT58
Farbe	Text brilliant grey RAL 9006
Bearbeitungstyp	Pulverbeschichtung mit duroplastischen Pulvern

Oberfläche Oberfläche diffusor	
Material	Extra-helles Glas - Gehärtet
Farbe	Transparent

Oberfläche Oberfläche sockel	
Material	Pom-C
Farbe	Schwarz

Cables Electrification	
Cable connector	No connector - Neoprene 2x1mm²

Linea Light Group reserves the right, without any advance notice, to change the characteristics of their products, as well as the availability of the same at any time. No product, relative technical data, illustrations and information are binding for Linea Light Group. Linea Light Group will not be held liable for any illustration, text and/or translation\ errors. All values indicated are measured values. There is a +/- 10% tolerance for the flow, CCT and power data.

Uplights | CRI 80
83569W60

Single emission uplights for outdoor application. The warm white LED light source with a wide flood light distribution is composed of 1 powerled LEDs with CCT of 3000 K and a CRI 80; the source luminous flux is 249 lm, with a 155.6 lm/W nominal luminous efficacy.

The device body is made of brass ot58 and features a text brilliant grey ral 9006 finish, processed by means of powder coating with thermosetting powders; the diffuser is made of extra clear glass - tempered.

The ingress protection degree is IP67; the total weight is of 0.230 kg.

The total absorbed power is 3 W The power supply cable is included and features a 1 m length.

The device features protection class II and can be wall lights or floor-mounted, with a 29 mm diameter hole (in plasterboard) with an outer casing, code 84918(for concrete or masonry).

Compliant with the EN 60598-1 standard and its specific provisions.

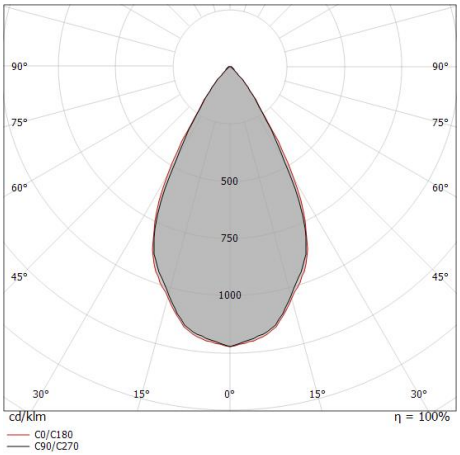

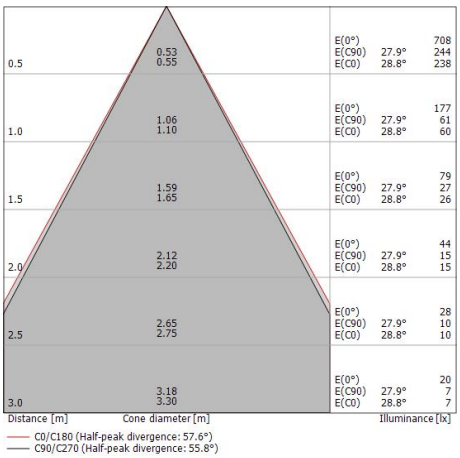

Energieeffizienzklasse
Dieses Produkt enthält eine Lichtquelle der Energieeffizienzklasse D.

Illuminotechnical Eigenschaften	
Light Output Ratio (LOR)	58 %
Lichtstrom (Lichtquelle)	249 lm
Leuchten Lichtstrom	145 lm
Consumption	3 W
Leuchten Lichtausbeute	48 lm/W
Farbtemperatur	3000 K
Standard Deviation of Colour Matching	1.5 Step
Farbwiedergabeindex	80 Ra
Standardumgebungstemperatur	-20 / +50°C
Typische Temperatur am Glas	50°C

LED Life / Failure Ratio
L70 B10 C0 1240219h (at Tj 65 Ta 25)
L80 B10 C0 745627h (at Tj 65 Ta 25)
L90 B10 C0 309367h (at Tj 65 Ta 25)

UGR	
UGR axial	22.5
UGR transversal	22.6
X=4H | Y=8H	S=0.25H
Reflection factor	70/50/20

OPTICAL	
Optik C0/C180	56°
Light distribution simmetry	Symmetrical

Linea Light Group reserves the right, without any advance notice, to change the characteristics of their products, as well as the availability of the same at any time. No product, relative technical data, illustrations and information are binding for Linea Light Group. Linea Light Group will not be held liable for any illustration, text and/or translation\ errors. All values indicated are measured values. There is a +/- 10% tolerance for the flow, CCT and power data.

Beret_2R | Uplights | Accessories
83569W60

Einbaugehäuse
installationsposition: boden; typ installation: mauerwerk L=87mm, H=60mm, D=60mm.
Material:Kunststoff ABS, farbe:Black.

Code
84918

Linea Light Group reserves the right, without any advance notice, to change the characteristics of their products, as well as the availability of the same at any time. No product, relative technical data, illustrations and information are binding for Linea Light Group. Linea Light Group will not be held liable for any illustration, text and/or translation\ errors. All values indicated are measured values. There is a +/- 10% tolerance for the flow, CCT and power data.