| CRI 80
83514A00





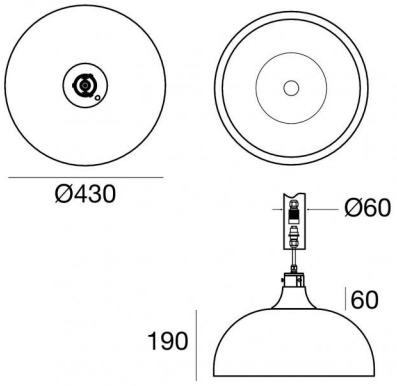

Technische Daten	
Typ	Poller & Mastaufsatzleuchten - Lichtpoller
Installationsposition	Mast
Installationsumgebung	Outdoor
Lichtquelle	LED
Circuit structure	topLED
Optik	Diffuses
Light emission direction	downward
Lampe Nennleistung	50 W DC
Gesamtleistung	55 W
Lichtstrom (Lichtquelle)	7182 lm
Nominale Eingangsspannung	220 - 240 V AC
Eingangsspannungsbereich	198 - 264 V AC
Frequency	50 - 60 Hz
Ähnlichste Farbtemperatur / Tone	2200 K
Farbwiedergabeindex	80 Ra
Gleichstrom/Gleichspannung	AC
Isolierklasse	2
IP	IP66
IK	IK08
Glühdrahtprüfung	850°
Direkte Montage auf normal entflammbaren Oberflächen	Ja
CE	Ja
Einschließlich Driver	Driver
Leuchte dimmbar	Nein
Schwenkbarkeit	Nein
Drehbarkeit	Nein
Begehbarkeit	Nein
Überrollbarkeit	Nein
Einschließlich Kabel	Ja
Kabellänge	1 m
Harzbeschichtung	Nein
Typ Lichtabstrahlung	Einflammig
Oberfläche Seitenwind ausgesetzt	0,029 m²
Oberfläche dem Wind ausgesetzt - Plan	0,14 m²
Nettogewicht	7.3 Kg
Schutz vor elektrostatischen Entladungen	Ja
Schutz vor Stoßspannungen	5 KV

Oberfläche Oberfläche Gehäuse	
Material	Stranggepresstes Aluminium EN AB - 46100
Farbe	Grau
Bearbeitungstyp	Pulverbeschichtung mit duroplastischen Pulvern

Oberfläche Oberfläche diffusor	
Material	Gehärtetes Glas
Farbe	sandgestrahltem weiß

Linea Light Group reserves the right, without any advance notice, to change the characteristics of their products, as well as the availability of the same at any time. No product, relative technical data, illustrations and information are binding for Linea Light Group. Linea Light Group will not be held liable for any illustration, text and/or translation\ errors. All values indicated are measured values. There is a +/- 10% tolerance for the flow, CCT and power data.

| CRI 80
83514A00

Single emission bollard & pole for outdoor application. The ancient white LED light source with a diffused light distribution is composed of 216 topled LEDs with CCT of 2200 K and a CRI 80; the source luminous flux is 7182 lm, with a 143.6 lm/W nominal luminous efficacy.

The device body is made of die-cast aluminium en ab - 46100 and features a grey finish, processed by means of powder coating with thermosetting powders; the diffuser is made of glass - tempered.

The ingress protection degree is IP66; the total weight is of 7.3 kg.

The total absorbed power is 55 W The power supply cable is included and features a 1 m length.

The device features protection class II and can be pole-mounted.

Compliant with the EN 60598-1 standard and its specific provisions.

Energieeffizienzklasse
Dieses Produkt enthält 2 Lichtquellen der Energieeffizienzklasse E.

Illuminotechnical Eigenschaften	
Lichtstrom (Lichtquelle)	7182 lm
Farbtemperatur	2200 K
Standard Deviation of Colour Matching	3 Step MacAdam
Farbwiedergabeindex	80 Ra
Standardumgebungstemperatur	-20 / +50°C

LED Life / Failure Ratio
L70 B10 C0 145600h (at Tj 65 Ta 25)
L80 B10 C0 92440h (at Tj 65 Ta 25)
L90 B10 C0 45500h (at Tj 65 Ta 25)

Linea Light Group reserves the right, without any advance notice, to change the characteristics of their products, as well as the availability of the same at any time. No product, relative technical data, illustrations and information are binding for Linea Light Group. Linea Light Group will not be held liable for any illustration, text and/or translation\ errors. All values indicated are measured values. There is a +/- 10% tolerance for the flow, CCT and power data.