Poller & Mastaufsatzleuchten - Teste palo | CRI 80

82995C72



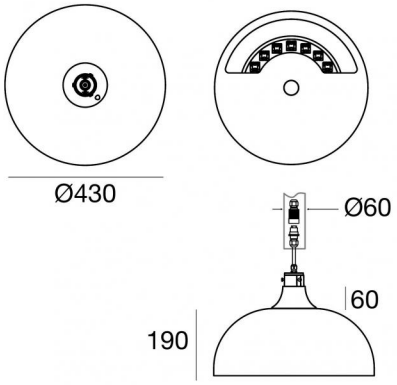

Technische Daten	
Typ	Poller & Mastaufsatzleuchten - Lichtpoller
Installationsposition	Mast
Installationsumgebung	Outdoor
Lichtquelle	LED
Circuit structure	powerLEDs
Optik	STREET
Light emission direction	downward
Lampe Nennleistung	31 W DC
Gesamtleistung	35 W
Lichtstrom (Lichtquelle)	4686 lm
Nominale Eingangsspannung	220 - 240 V AC
Eingangsspannungsbereich	198 - 264 V AC
Frequency	50 - 60 Hz
Ähnlichste Farbtemperatur / Tone	6500 K
Farbwiedergabeindex	80 Ra
Gleichstrom/Gleichspannung	AC
Isolierklasse	2
IP	IP66
IK	IK08
Glühdrahtprüfung	850°
Direkte Montage auf normal entflammbaren Oberflächen	Ja
CE	Ja
Einschließlich Driver	Driver
Leuchte dimmbar	Nein
Schwenkbarkeit	Nein
Drehbarkeit	Nein
Begehbarkeit	Nein
Überrollbarkeit	Nein
Einschließlich Kabel	Ja
Kabellänge	1 m
Harzbeschichtung	Nein
Typ Lichtabstrahlung	Einflammig
Oberfläche Seitenwind ausgesetzt	0,029 m²
Oberfläche dem Wind ausgesetzt - Plan	0,14 m²
Nettogewicht	7.3 Kg
Schutz vor elektrostatischen Entladungen	Ja
Schutz vor Stoßspannungen	4 KV

Oberfläche Oberfläche Gehäuse	
Material	Stranggepresstes Aluminium EN AB - 46100
Farbe	Grau
Bearbeitungstyp	Pulverbeschichtung mit duroplastischen Pulvern

Oberfläche Oberfläche diffusor	
Material	Extra-helles Glas
Farbe	transparent
Bearbeitungstyp	Siebdruck

Linea Light Group reserves the right, without any advance notice, to change the characteristics of their products, as well as the availability of the same at any time. No product, relative technical data, illustrations and information are binding for Linea Light Group. Linea Light Group will not be held liable for any illustration, text and/or translation\ errors. All values indicated are measured values. There is a +/- 10% tolerance for the flow, CCT and power data.

Poller & Mastaufsatzleuchten - Teste palo | CRI 80
82995C72

Single emission bollard & pole for outdoor application. The cold white LED light source with a street light distribution is composed of 4 powerled LEDs with CCT of 6500 K and a CRI 80; the source luminous flux is 4686 lm, with a 151.2 lm/W nominal luminous efficacy.

The device body is made of die-cast aluminium en ab - 46100 and features a grey finish, processed by means of powder coating with thermosetting powders; the diffuser is made of extra clear glass with a silk-screening treatment.

The ingress protection degree is IP66; the total weight is of 7.3 kg.

The total absorbed power is 35 W The power supply cable is included and features a 1 m length.

The device features protection class II and can be pole-mounted.

Compliant with the EN 60598-1 standard and its specific provisions.

Energieeffizienzklasse
Dieses Produkt enthält eine Lichtquelle der Energieeffizienzklasse E.

Illuminotechnical Eigenschaften	
Light Output Ratio (LOR)	64 %
Lichtstrom (Lichtquelle)	4686 lm
Leuchten Lichtstrom	3002 lm
Consumption	35 W
Leuchten Lichtausbeute	85 lm/W
Farbtemperatur	6500 K
Standard Deviation of Colour Matching	3 Step MacAdam
Farbwiedergabeindex	80 Ra
Standardumgebungstemperatur	-20 / +50°C

LED Life / Failure Ratio
L70 B10 C0 363000h (at Tj 65 Ta 25)
L80 B10 C0 237566h (at Tj 65 Ta 25)
L90 B10 C0 151000h (at Tj 65 Ta 25)

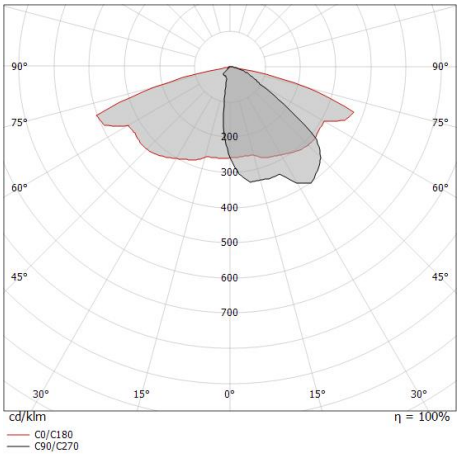

Linea Light Group reserves the right, without any advance notice, to change the characteristics of their products, as well as the availability of the same at any time. No product, relative technical data, illustrations and information are binding for Linea Light Group. Linea Light Group will not be held liable for any illustration, text and/or translation\ errors. All values indicated are measured values. There is a +/- 10% tolerance for the flow, CCT and power data.