Uplights | 1 arrayLED 13 W DC 24 V | CRI 80

82459N30





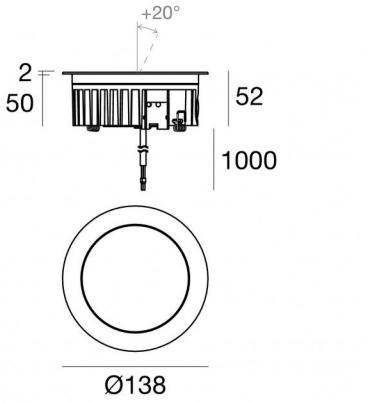

Technische Daten	
Typ	Begehbar
Installationsposition	Boden
Installationsumgebung	Outdoor
Lichtquelle	LED
Circuit structure	arrayLED
Optik	Flood
Light emission direction	upward
Lampe Nennleistung	13 W DC
Lichtstrom (Lichtquelle)	2046 lm
Eingangsspannungsbereich	700mA
Ähnlichste Farbtemperatur / Tone	4000 K
Farbwiedergabeindex	80 Ra
Gleichstrom/Gleichspannung	CV
Isolierklasse	3
IP	IP68
Installationsbeschränkung	Nicht für Einsatz unter Wasser
IK	IK10
Glühdrahtprüfung	850°
Direkte Montage auf normal entflammbaren Oberflächen	Ja
CE	Ja
Einschließlich Driver	Nein
C.V. - C.C. Converter	24 V Konverter enthalten
Leuchte dimmbar	Nein
Schwenkbarkeit	Nein
Drehbarkeit	Ja
Gesamtwinkel (vertikale Ebene)	20 °
Begehbarkeit	Ja
Überrollbarkeit	2000 Kg
Einschließlich Kabel	Ja
Kabellänge	1 m
Harzbeschichtung	Ja
Typ Lichtabstrahlung	Einflammig
Nettogewicht	0.9 Kg
Schutz vor elektrostatischen Entladungen	Nein
Schutz vor Stoßspannungen	Nein
Optiktechnologie	Honey comb
Technische Merkmale des Produkts	Acquastop

Oberfläche Oberfläche Gehäuse	
Material	Stranggepresstes Aluminium EN AB - 46100
Farbe	Matt black (R9005)
Bearbeitungstyp	Offenporige Anodisierung + Pulverlackierung

Oberfläche Oberfläche diffusor	
Material	Extra-helles Glas - Gehärtet
Farbe	transparent
Bearbeitungstyp	Siebdruck

Oberfläche Oberfläche flansch	
Material	Edelstahl AISI 316L
Farbe	Stahl
Bearbeitungstyp	Bürsten

Elektronik



89179
On/Off Driver 198~264V AC 24 W (1 art.)



89359
On/Off Driver 198~264V AC / V DC (1 - 3 art.)



99331
On/Off Driver 198~264V AC / 176~275V DC 150 W (1 - 11 art.)



99660
DALI - 1-10V Controller V DC (- art.)



C-E500023
DALI - 1-10V - Push and Simply Dim Controller V DC (- art.)

Cables Electrification	
Cable connector	No connector - Neoprene 2x0.5mm²

Linea Light Group reserves the right, without any advance notice, to change the characteristics of their products, as well as the availability of the same at any time. No product, relative technical data, illustrations and information are binding for Linea Light Group. Linea Light Group will not be held liable for any illustration, text and/or translation\ errors. All values indicated are measured values. There is a +/- 10% tolerance for the flow, CCT and power data.

Uplights | 1 arrayLED 13 W DC 24 V | CRI 80
82459N30

Single emission uplights for outdoor application. The natural white LED light source with a flood light distribution is composed of 1 arrayled LEDs with CCT of 4000 K and a CRI 80; the source luminous flux is 2046 lm, with a 157.4 lm/W nominal luminous efficacy.

The device body is made of die-cast aluminium en ab - 46100 and features a matt black (r9005) finish, processed by means of open pore anodizing + powder coating; the diffuser is made of extra clear glass - tempered with a silk-screening treatment. Surface treatment of the product body through aluminum chemical conversion, followed by polyester powder coating, using exclusively coatings compliant with the Qualicoat standard.The product flange is made of steel, a material that ensures high robustness, superior mechanical strength and extended durability, guaranteeing maximum component reliability over time.

The ingress protection degree is IP68; the total weight is of 0.9 kg.

The total absorbed power is 13 W The power supply cable is included and features a 1 m length.

The device features protection class III and can be floor-mounted with an outer casing, code 99652(for concrete or masonry).

Compliant with the EN 60598-1 standard and its specific provisions.

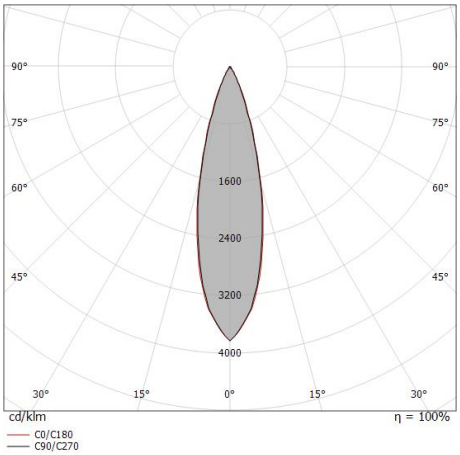

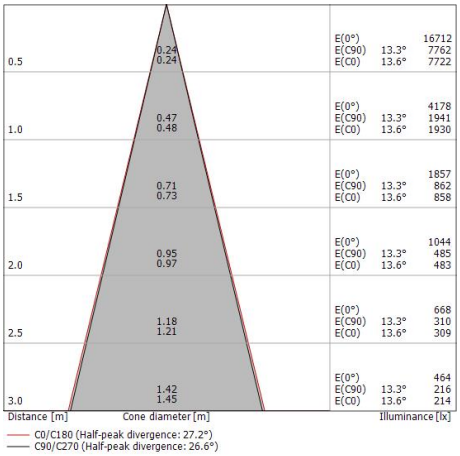

Energieeffizienzklasse
Dieses Produkt enthält eine Lichtquelle der Energieeffizienzklasse D.

Illuminotechnical Eigenschaften	
Light Output Ratio (LOR)	53 %
Lichtstrom (Lichtquelle)	2046 lm
Leuchten Lichtstrom	1090 lm
Consumption	13 W
Leuchten Lichtausbeute	83 lm/W
Farbtemperatur	4000 K
Standard Deviation of Colour Matching	2 Step MacAdam
Farbwiedergabeindex	80 Ra
Standardumgebungstemperatur	-20 / +50°C
Typische Temperatur am Glas	40°C

LED Life / Failure Ratio
L70 B10 C0 211958h (at Tj 65 Ta 25)
L80 B10 C0 132729h (at Tj 65 Ta 25)
L90 B10 C0 62845h (at Tj 65 Ta 25)

UGR	
UGR axial	9.1
UGR transversal	9.5
X=4H | Y=8H	S=0.25H
Reflection factor	70/50/20

OPTICAL	
Optik C0/C180	27°
Light distribution simmetry	Symmetrical

Linea Light Group reserves the right, without any advance notice, to change the characteristics of their products, as well as the availability of the same at any time. No product, relative technical data, illustrations and information are binding for Linea Light Group. Linea Light Group will not be held liable for any illustration, text and/or translation\ errors. All values indicated are measured values. There is a +/- 10% tolerance for the flow, CCT and power data.

Orma_IJ | Uplights | Accessories
82459N30



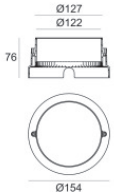

Einbaugehäuse

installationsposition: boden; typ installation: mauerwerk L=154mm, H=76mm, D=154mm.
Material:Kunststoff ABS, farbe:Black.

Code

99652

Linea Light Group reserves the right, without any advance notice, to change the characteristics of their products, as well as the availability of the same at any time. No product, relative technical data, illustrations and information are binding for Linea Light Group. Linea Light Group will not be held liable for any illustration, text and/or translation\ errors. All values indicated are measured values. There is a +/- 10% tolerance for the flow, CCT and power data.