Lineare Elemente | 220-240 V
6 x powerLED 12.2 W DC - 15 W AC | CRI 80
82309M60

MARINE GRADE



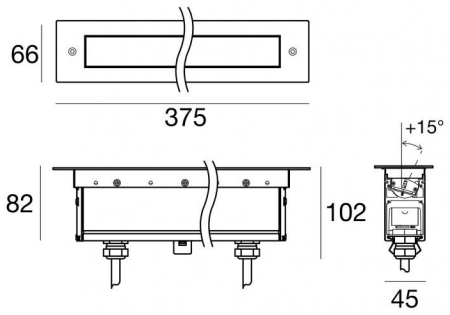

Technische Daten	
Typ	Frame
Installationsposition	Boden
Installationsumgebung	Outdoor
Lichtquelle	LED
Circuit structure	powerLED
Optik	60°
Light emission direction	upward
Lampe Nennleistung	12.2 W DC
Gesamtleistung	15 W
Lichtstrom (Lichtquelle)	1692 lm
Nominale Eingangsspannung	220 - 240 V AC
Eingangsspannungsbereich	220 - 240 V AC
Frequency	50 - 60 Hz
Ähnlichste Farbtemperatur / Tone	2700 K
Farbwiedergabeindex	80 Ra
Gleichstrom/Gleichspannung	AC
Isolierklasse	1
IP	IP67
IK	IK10
Glühdrahtprüfung	850°
Direkte Montage auf normal entflammbaren Oberflächen	Ja
CE	Ja
Einschließlich Driver	Driver
Leuchte dimmbar	DALI
Schwenkbarkeit	Nein
Drehbarkeit	Ja
Gesamtwinkel (horizontale Ebene)	15 °
Gesamtwinkel (vertikale Ebene)	0 °
Begehbarkeit	Ja
Überrollbarkeit	Nein
Einschließlich Kabel	Ja
Kabellänge	0.2 m
Harzbeschichtung	Nein
Typ Lichtabstrahlung	Einflammig
Nettogewicht	1.5 Kg
Schutz vor elektrostatischen Entladungen	4 KV
Schutz vor Stoßspannungen	6 KV

Oberfläche Oberfläche Gehäuse	
Material	Aluminiumlegierung 6060
Farbe	Anodised black aluminium
Bearbeitungstyp	Anodisierung 15 µm

Oberfläche Oberfläche diffusor	
Material	Extra-helles Glas - Gehärtet
Farbe	transparent
Bearbeitungstyp	Siebdruck

Oberfläche Oberfläche flansch	
Material	Edelstahl AISI 316
Farbe	Stahl
Bearbeitungstyp	Bürsten

Cables Electrification+signal	
IP (locked condition)	68
Cable connector	Female Socket 5 Pin
IP (locked condition)	68
Cable connector	Male Plug 5 Pin

Linea Light Group reserves the right, without any advance notice, to change the characteristics of their products, as well as the availability of the same at any time. No product, relative technical data, illustrations and information are binding for Linea Light Group. Linea Light Group will not be held liable for any illustration, text and/or translation\ errors. All values indicated are measured values. There is a +/- 10% tolerance for the flow, CCT and power data.

Lineare Elemente | 220-240 V | 6 x powerLED 12.2 W DC - 15 W AC | CRI 80
82309M60

Single emission lines for outdoor application. The super warm white LED light source is composed of 6 powerled LEDs with CCT of 2700 K and a CRI 80; the source luminous flux is 1692 lm, with a 138.7 lm/W nominal luminous efficacy.

Product suitable for installations in coastal areas with high salinity and strong exposure to atmospheric agents.

The device body is made of aluminium alloy 6060 and features a anodised black aluminium finish, processed by means of 15 µm anodizing; the diffuser is made of extra clear glass - tempered with a silk-screening treatment. Surface treatment of the product body with chemical conversion of aluminum, designed to ensure maximum long?term resistance.The product flange is made of steel, a material that ensures high robustness, superior mechanical strength and extended durability, guaranteeing maximum component reliability over time.

The ingress protection degree is IP67; the total weight is of 1.5 kg.

The total absorbed power is 15 W The power supply cable is included and features a 0.2 m length.

The device features protection class I and can be floor-mounted with an outer casing, code 98671(for concrete or masonry).

Compliant with the EN 60598-1 standard and its specific provisions.

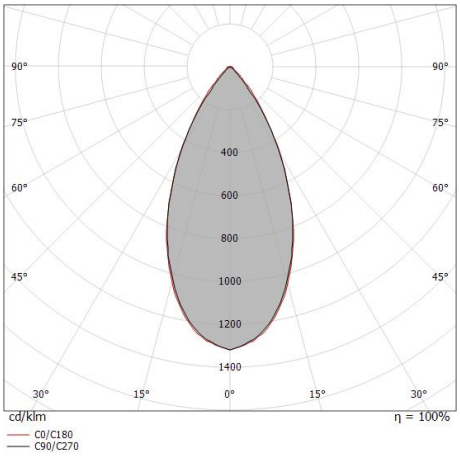

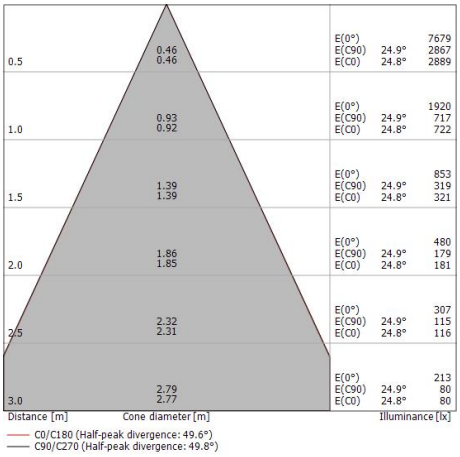

Energieeffizienzklasse
Dieses Produkt enthält eine Lichtquelle der Energieeffizienzklasse D.

Illuminotechnical Eigenschaften	
Light Output Ratio (LOR)	86 %
Lichtstrom (Lichtquelle)	1692 lm
Leuchten Lichtstrom	1456 lm
Consumption	15 W
Leuchten Lichtausbeute	97 lm/W
Farbtemperatur	2700 K
Standard Deviation of Colour Matching	1.5 Step
Farbwiedergabeindex	80 Ra
Standardumgebungstemperatur	-20 / +50°C
Typische Temperatur am Glas	40°C

LED Life / Failure Ratio
L70 B10 C0 1240219h (at Tj 65 Ta 25)
L80 B10 C0 745627h (at Tj 65 Ta 25)
L90 B10 C0 309367h (at Tj 65 Ta 25)

UGR	
UGR axial	18.7
UGR transversal	23.6
X=4H | Y=8H	S=0.25H
Reflection factor	70/50/20

OPTICAL	
Optik C0/C180	50°
Light distribution simmetry	Symmetrical

Linea Light Group reserves the right, without any advance notice, to change the characteristics of their products, as well as the availability of the same at any time. No product, relative technical data, illustrations and information are binding for Linea Light Group. Linea Light Group will not be held liable for any illustration, text and/or translation\ errors. All values indicated are measured values. There is a +/- 10% tolerance for the flow, CCT and power data.

Archiline_IJ | Lines | Accessories
82309M60

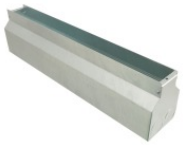

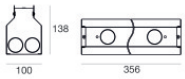

Einbaugehäuse
installationsposition: wand, boden; typ installation: mauerwerk L=356mm, H=138.3mm, D=100.2mm.
Material:Eisen, farbe:Zink, bearbeitungstyp :Verzinken.

Code
98671



Kabel und Stecker
Länge 1000 mm.

Code
99826



Kabel und Stecker
Länge 5000 mm.

Code
99822



Kabel und Stecker
Länge 1000 mm.

Code
99823



Kabel und Stecker
Länge 5000 mm.

Code
99824



Kabel und Stecker
Länge 10000 mm.

Code
99825

Linea Light Group reserves the right, without any advance notice, to change the characteristics of their products, as well as the availability of the same at any time. No product, relative technical data, illustrations and information are binding for Linea Light Group. Linea Light Group will not be held liable for any illustration, text and/or translation\ errors. All values indicated are measured values. There is a +/- 10% tolerance for the flow, CCT and power data.