Lineare Elemente | 198-264 V
6 x powerLED 13.2 W DC - 14.5 W AC | CRI 80
82308M25

MARINE GRADE



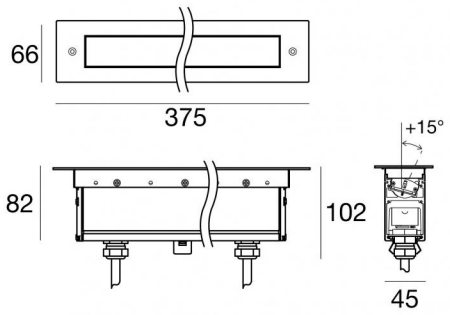

Technische Daten	
Typ	Frame
Installationsposition	Boden
Installationsumgebung	Outdoor
Lichtquelle	LED
Circuit structure	powerLED
Optik	Elliptical
Light emission direction	upward
Lampe Nennleistung	13.2 W DC
Gesamtleistung	14.5 W
Lichtstrom (Lichtquelle)	1692 lm
Nominale Eingangsspannung	220 - 240 V AC
Eingangsspannungsbereich	198 - 264 V AC
Frequency	50 - 60 Hz
Ähnlichste Farbtemperatur / Tone	2700 K
Farbwiedergabeindex	80 Ra
Gleichstrom/Gleichspannung	AC
Isolierklasse	1
IP	IP67
IK	IK10
Glühdrahtprüfung	850°
Direkte Montage auf normal entflammbaren Oberflächen	Ja
CE	Ja
Einschließlich Driver	Driver
Leuchte dimmbar	Nein
Schwenkbarkeit	Nein
Drehbarkeit	Ja
Gesamtwinkel (horizontale Ebene)	15 °
Gesamtwinkel (vertikale Ebene)	0 °
Begehbarkeit	Ja
Überrollbarkeit	Nein
Einschließlich Kabel	Ja
Kabellänge	0.2 m
Harzbeschichtung	Nein
Typ Lichtabstrahlung	Einflammig
Nettogewicht	1.5 Kg
Schutz vor elektrostatischen Entladungen	4 KV
Schutz vor Stoßspannungen	6 KV

Oberfläche Oberfläche Gehäuse	
Material	Aluminiumlegierung 6060
Farbe	Anodised black aluminium
Bearbeitungstyp	Anodisierung 15 µm

Oberfläche Oberfläche diffusor	
Material	Extra-helles Glas - Gehärtet
Farbe	transparent
Bearbeitungstyp	Siebdruck

Oberfläche Oberfläche flansch	
Material	Edelstahl AISI 316
Farbe	Stahl
Bearbeitungstyp	Bürsten

Cables Electrification	
Cable connector	Male Plug 3 pin
IP (locked condition)	68

IP (locked condition)	68
Cable connector	Female Socket 3 Pin

Linea Light Group reserves the right, without any advance notice, to change the characteristics of their products, as well as the availability of the same at any time. No product, relative technical data, illustrations and information are binding for Linea Light Group. Linea Light Group will not be held liable for any illustration, text and/or translation\ errors. All values indicated are measured values. There is a +/- 10% tolerance for the flow, CCT and power data.

Lineare Elemente | 198-264 V | 6 x powerLED 13.2 W DC - 14.5 W AC | CRI 80
82308M25

Single emission lines for outdoor application. The super warm white LED light source with a elliptical light distribution is composed of 6 powerled LEDs with CCT of 2700 K and a CRI 80; the source luminous flux is 1692 lm, with a 128.2 lm/W nominal luminous efficacy.

Product suitable for installations in coastal areas with high salinity and strong exposure to atmospheric agents.

The device body is made of aluminium alloy 6060 and features a anodised black aluminium finish, processed by means of 15 µm anodizing; the diffuser is made of extra clear glass - tempered with a silk-screening treatment. Surface treatment of the product body with chemical conversion of aluminum, designed to ensure maximum long?term resistance.The product flange is made of steel, a material that ensures high robustness, superior mechanical strength and extended durability, guaranteeing maximum component reliability over time.

The ingress protection degree is IP67; the total weight is of 1.5 kg.

The total absorbed power is 14.5 W The power supply cable is included and features a 0.2 m length.

The device features protection class I and can be floor-mounted with an outer casing, code 98671(for concrete or masonry).

Compliant with the EN 60598-1 standard and its specific provisions.

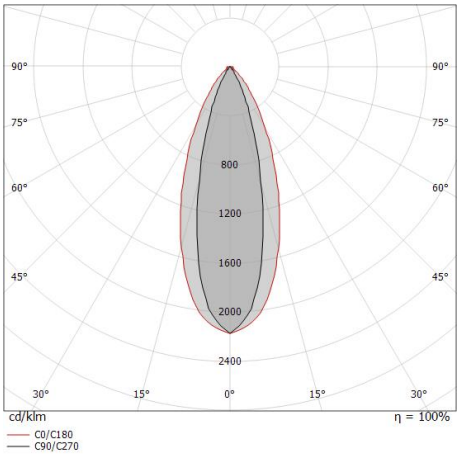

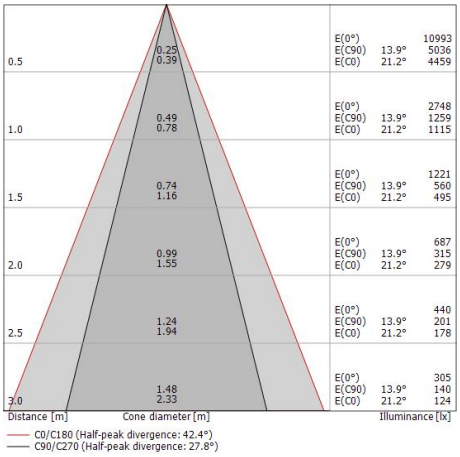

Energieeffizienzklasse
Dieses Produkt enthält eine Lichtquelle der Energieeffizienzklasse D.

Illuminotechnical Eigenschaften	
Light Output Ratio (LOR)	74 %
Lichtstrom (Lichtquelle)	1692 lm
Leuchten Lichtstrom	1266 lm
Consumption	14.5 W
Leuchten Lichtausbeute	87 lm/W
Farbtemperatur	2700 K
Standard Deviation of Colour Matching	1.5 Step
Farbwiedergabeindex	80 Ra
Standardumgebungstemperatur	-20 / +50°C
Typische Temperatur am Glas	40°C

LED Life / Failure Ratio
L70 B10 C0 1240219h (at Tj 65 Ta 25)
L80 B10 C0 745627h (at Tj 65 Ta 25)
L90 B10 C0 309367h (at Tj 65 Ta 25)

UGR	
UGR axial	13.5
UGR transversal	24.6
X=4H | Y=8H	S=0.25H
Reflection factor	70/50/20

OPTICAL	
Optik C90/C270	28°
Optik C0/C180	42°
Light distribution simmetry	Symmetrical 2 assis

Linea Light Group reserves the right, without any advance notice, to change the characteristics of their products, as well as the availability of the same at any time. No product, relative technical data, illustrations and information are binding for Linea Light Group. Linea Light Group will not be held liable for any illustration, text and/or translation\ errors. All values indicated are measured values. There is a +/- 10% tolerance for the flow, CCT and power data.

Archiline_IJ | Lines | Accessories
82308M25



Kabel und Stecker
Länge 2000 mm; isolierung doppio; querschnitt 1.5 mm²; kabelklemme: nein; außendurchmesser: 9.5 mm; farben: blau - braun - gelb-grün.

Code
99057



Kabel und Stecker
Länge 5000 mm; isolierung doppio; querschnitt 1.5 mm²; kabelklemme: nein; außendurchmesser: 9.5 mm; farben: blau - braun - gelb-grün.

Code
98147



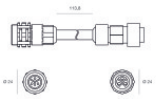

Kabel und Stecker
Länge 10000 mm; isolierung doppio; querschnitt 1.5 mm²; kabelklemme: nein; außendurchmesser: 9.5 mm; farben: blau - braun - gelb-grün.

Code
98146

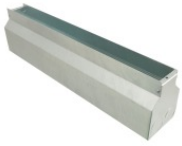

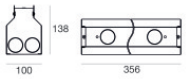

Einbaugehäuse
installationsposition: wand, boden; typ installation: mauerwerk L=356mm, H=138.3mm, D=100.2mm. Material:Eisen, farbe:Zink, bearbeitungstyp :Verzinken.

Code
98671



Kabel und Stecker
Länge 2000 mm; isolierung doppio; querschnitt 1.5 mm²; kabelklemme: nein; außendurchmesser: 9.5 mm; farben: blau - braun - gelb-grün.

Code
99056

Linea Light Group reserves the right, without any advance notice, to change the characteristics of their products, as well as the availability of the same at any time. No product, relative technical data, illustrations and information are binding for Linea Light Group. Linea Light Group will not be held liable for any illustration, text and/or translation\ errors. All values indicated are measured values. There is a +/- 10% tolerance for the flow, CCT and power data.