Prolamp RGBW

Scheinwerfer | 8 x powerLEDs 59 W DC 48 V
RGBW - 4000
81949Q06

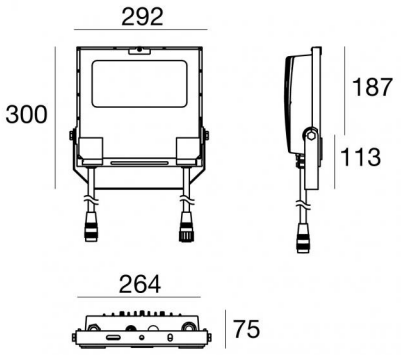

Technische Daten	
Typ	Oberfläche
Installationsposition	Wand - Decke - Boden
Installationsumgebung	Outdoor
Lichtquelle	LED
Circuit structure	powerLEDs
Optik	Ultra Spot
Light emission direction	frontal
Lampe Nennleistung	59 W DC
Lichtstrom (Lichtquelle)	2952 lm
Ähnlichste Farbtemperatur / Tone	RGBW - 4000 K
Gleichstrom/Gleichspannung	CV
Isolierklasse	3
IP	IP67
IK	IK08
Glühdrahtprüfung	850°
Direkte Montage auf normal entflammbaren Oberflächen	Ja
CE	Ja
Einschließlich Driver	Control unit
Leuchte dimmbar	DMX-RDM
Schwenkbarkeit	Orientabile
Gesamtwinkel (vertikale Ebene)	180 °
Drehbarkeit	Nein
Begehbarkeit	Nein
Überrollbarkeit	Nein
Einschließlich Kabel	Ja
Kabellänge	0.3 m
Harzbeschichtung	Nein
Typ Lichtabstrahlung	Einflammig
Nettogewicht	3.8 Kg
Schutz vor elektrostatischen Entladungen	Ja
Schutz vor Stoßspannungen	4 KV
Technische Merkmale des Produkts	TCS

Oberfläche Oberfläche Gehäuse	
Material	Stranggepresstes Aluminium EN AB - 46100
Farbe	Text black RAL9005
Bearbeitungstyp	Offenporige Anodisierung + Pulverlackierung

Oberfläche Oberfläche diffusor	
Material	Extra-helles Glas - Gehärtet
Farbe	transparent
Bearbeitungstyp	Siebdruck

Oberfläche Oberfläche bügel	
Material	Stahl AISI 304
Farbe	Stahl

Elektronik

99785
On/Off Driver 100~305V AC / V DC (- art.)

C-E700026
DMX Controller (- art.)

Cables Electrification+signal	
Cable connector	AllinONE Male Plug 6 Pin
IP (locked condition)	67
Cable connector	ALLinONE Female Socket 6 Pin
IP (locked condition)	67

Nennlichtstrom für eine einzelne Farbe - RGBW - 4000K

N. Led	Rot	Grün	Blau	Weiß
8	592 lm	968 lm	168 lm	1224 lm

Linea Light Group reserves the right, without any advance notice, to change the characteristics of their products, as well as the availability of the same at any time. No product, relative technical data, illustrations and information are binding for Linea Light Group. Linea Light Group will not be held liable for any illustration, text and/or translation\ errors. All values indicated are measured values. There is a +/- 10% tolerance for the flow, CCT and power data.

Scheinwerfer | 8 x powerLEDs 59 W DC 48 V | RGBW - 4000
81949Q06

Single emission projectors for outdoor application. The RGBW - 4000 K LED light source with a ultra spot light distribution is composed of 8 powerled LEDs with CCT of RGB-W 4000 K the source luminous flux is 2952 lm, with a 50.0 lm/W nominal luminous efficacy.

The device body is made of die-cast aluminium en ab - 46100 and features a text black ral9005 finish, processed by means of open pore anodizing + powder coating; the diffuser is made of extra clear glass - tempered with a silk-screening treatment. Surface treatment of the product body through aluminum chemical conversion, followed by polyester powder coating, using exclusively coatings compliant with the Qualicoat standard.

The ingress protection degree is IP67; the total weight is of 3.8 kg.

The total absorbed power is 59 W The power supply cable is included and features a 0.3 m length.

The device features protection class III and can be wall lights, ceiling or floor-mounted.

Compliant with the EN 60598-1 standard and its specific provisions.

Energieeffizienzklasse
Dieses Produkt enthält eine Lichtquelle der Energieeffizienzklasse G.

Standardumgebungstemperatur	-20 / +50°C
Typische Temperatur am Glas	40°C

LED Life / Failure Ratio
L70 B10 C0 202460h (at Tj 60 Ta 25)

Linea Light Group reserves the right, without any advance notice, to change the characteristics of their products, as well as the availability of the same at any time. No product, relative technical data, illustrations and information are binding for Linea Light Group. Linea Light Group will not be held liable for any illustration, text and/or translation\ errors. All values indicated are measured values. There is a +/- 10% tolerance for the flow, CCT and power data.

Prolamp RGBW | Projectors | Accessories
81949Q06

Kabel und Stecker
Typ Kabel power + signal cable allinone; Länge 1000 mm; isolierung doppio con schermatura per segnale; außendurchmesser: 12.6 mm; farben: weiß - blau - rot - grau - braun - gelb-grün.

Code
98660

Kabel und Stecker
Typ Kabel power + signal cable allinone; Länge 5000 mm; isolierung doppio con schermatura per segnale; außendurchmesser: 12.6 mm; farben: weiß - blau - rot - grau - braun - gelb-grün.

Code
98661

Kabel und Stecker
Typ Kabel power + signal cable allinone; Länge 1000 mm; isolierung doppio con schermatura per segnale; außendurchmesser: 12.6 mm.

Code
98662

Kabel und Stecker
Typ Kabel power + signal cable allinone; Länge 5000 mm; isolierung doppio con schermatura per segnale; außendurchmesser: 12.6 mm.

Code
98663

Stecker - Start splitter
Typ Kabel power + signal cable allinone; Länge 5000 + 5000 + 200 mm; isolierung doppio con schermatura per segnale.

Code
98985

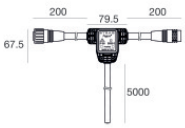

Stecker - Continuity splitter
Typ Kabel power + signal cable allinone; Länge 200 + 200 + 5000 mm; isolierung doppio con schermatura per segnale.

Code
99390

Stecker - DMX-Leitungsverschlussadapter für ALLinONE-Kabel
Typ Kabel power + signal cable allinone; ; isolierung doppio con schermatura per segnale.

Code
98986

Linea Light Group reserves the right, without any advance notice, to change the characteristics of their products, as well as the availability of the same at any time. No product, relative technical data, illustrations and information are binding for Linea Light Group. Linea Light Group will not be held liable for any illustration, text and/or translation\ errors. All values indicated are measured values. There is a +/- 10% tolerance for the flow, CCT and power data.