Guardian

Downlights | 198-264 V
1 arrayLED 7.2 W DC - 8.5 W AC | CRI 80
81838N15

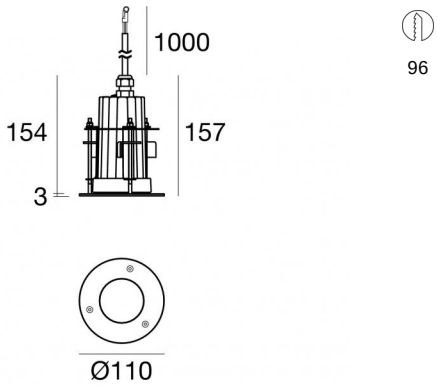

Technische Daten	
Installationsposition	Decke
Installationsumgebung	Outdoor
Lichtquelle	LED
Circuit structure	arrayLED
Optik	Spot
Light emission direction	downward
Lampe Nennleistung	7.2 W DC
Gesamtleistung	8.5 W
Lichtstrom (Lichtquelle)	1114 lm
Nominale Eingangsspannung	220 - 240 V AC
Eingangsspannungsbereich	198 - 264 V AC
Frequency	50 - 60 Hz
Ähnlichste Farbtemperatur / Tone	4000 K
Farbwiedergabeindex	80 Ra
Gleichstrom/Gleichspannung	AC
Isolierklasse	1
IP	IP67
IK	IK10
Glühdrahtprüfung	850°
Direkte Montage auf normal entflammbaren Oberflächen	Ja
CE	Ja
Einschließlich Driver	Driver
Leuchte dimmbar	Nein
Schwenkbarkeit	Nein
Drehbarkeit	Nein
Begehbarkeit	Nein
Überrollbarkeit	Nein
Einschließlich Kabel	Ja
Kabellänge	1 m
Harzbeschichtung	Ja
Einbautiefe	154 mm
Typ Lichtabstrahlung	Einflammig
Nettogewicht	1 Kg
Schutz vor elektrostatischen Entladungen	Ja
Schutz vor Stoßspannungen	1 KV
Technische Merkmale des Produkts	Acquastop

Oberfläche Oberfläche Gehäuse	
Material	Stranggepresstes Aluminium EN AB - 46100
Farbe	Matt black (R9005)
Bearbeitungstyp	Offenporige Anodisierung + Pulverlackierung

Oberfläche Oberfläche diffusor	
Material	Extra-helles Glas - Gehärtet
Farbe	Transparent

Oberfläche Oberfläche flansch	
Material	Aluminiumlegierung 6026
Farbe	Text brilliant grey RAL 9006
Bearbeitungstyp	Offenporige Anodisierung + Pulverlackierung

Cables Electrification	
Cable connector	No

Linea Light Group reserves the right, without any advance notice, to change the characteristics of their products, as well as the availability of the same at any time. No product, relative technical data, illustrations and information are binding for Linea Light Group. Linea Light Group will not be held liable for any illustration, text and/or translation\ errors. All values indicated are measured values. There is a +/- 10% tolerance for the flow, CCT and power data.

Downlights | 198-264 V | 1 arrayLED 7.2 W DC - 8.5 W AC | CRI 80
81838N15

Single emission recessed downlights for outdoor application. The natural white LED light source with a spot light distribution is composed of 1 arrayled LEDs with CCT of 4000 K and a CRI 80; the source luminous flux is 1114 lm, with a 154.7 lm/W nominal luminous efficacy.

The device body is made of die-cast aluminium en ab - 46100 and features a matt black (r9005) finish, processed by means of open pore anodizing + powder coating; the diffuser is made of extra clear glass - tempered. Surface treatment of the product body through aluminum chemical conversion, followed by polyester powder coating, using exclusively coatings compliant with the Qualicoat standard.The aluminum flange is treated with a chemical conversion process to ensure maximum paint adhesion and corrosion protection, followed by polyester powder coating using exclusively coatings compliant with the Qualicoat standard.

The ingress protection degree is IP67; the total weight is of 1 kg.

The total absorbed power is 8.5 W The power supply cable is included and features a 1 m length.

The device features protection class I and can be ceiling-mounted, with a 96 mm diameter hole (in plasterboard) with an outer casing, code 99673(for concrete or masonry).

Compliant with the EN 60598-1 standard and its specific provisions.

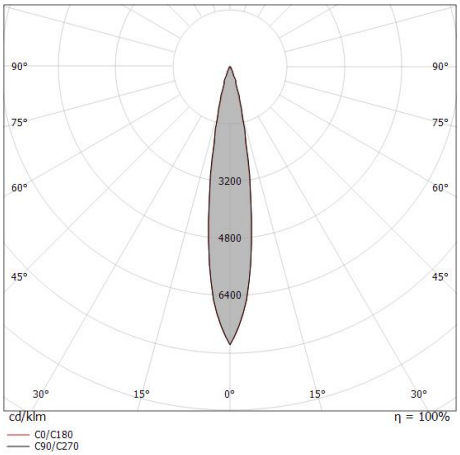

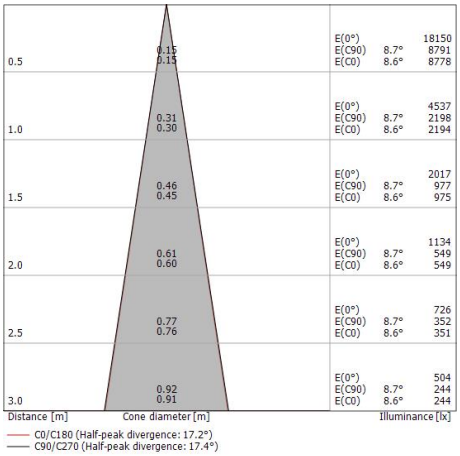

Energieeffizienzklasse
Dieses Produkt enthält eine Lichtquelle der Energieeffizienzklasse D.

Illuminotechnical Eigenschaften	
Light Output Ratio (LOR)	52 %
Lichtstrom (Lichtquelle)	1114 lm
Leuchten Lichtstrom	584 lm
Consumption	8.5 W
Leuchten Lichtausbeute	68 lm/W
Farbtemperatur	4000 K
Standard Deviation of Colour Matching	2 Step MacAdam
Farbwiedergabeindex	80 Ra
Standardumgebungstemperatur	-20 / +50°C
Typische Temperatur am Glas	40°C

LED Life / Failure Ratio
L70 B10 C0 231262h (at Tj 65 Ta 25)
L80 B10 C0 144799h (at Tj 65 Ta 25)
L90 B10 C0 68534h (at Tj 65 Ta 25)

UGR	
UGR axial	11.3
UGR transversal	11.1
X=4H | Y=8H	S=0.25H
Reflection factor	70/50/20

OPTICAL	
Optik C0/C180	17°
Light distribution simmetry	Symmetrical

Linea Light Group reserves the right, without any advance notice, to change the characteristics of their products, as well as the availability of the same at any time. No product, relative technical data, illustrations and information are binding for Linea Light Group. Linea Light Group will not be held liable for any illustration, text and/or translation\ errors. All values indicated are measured values. There is a +/- 10% tolerance for the flow, CCT and power data.

Guardian | Downlights | Accessories
81838N15

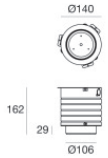

Einbaugehäuse
installationsposition: decke; typ installation: mauerwerk L=140mm, H=162mm, D=140mm.
Material:Grau.

Code
99673

Linea Light Group reserves the right, without any advance notice, to change the characteristics of their products, as well as the availability of the same at any time. No product, relative technical data, illustrations and information are binding for Linea Light Group. Linea Light Group will not be held liable for any illustration, text and/or translation\ errors. All values indicated are measured values. There is a +/- 10% tolerance for the flow, CCT and power data.