Diphy_P1

Pendelleuchte | 220-240 V
280 topLED 36 W DC - 40 W AC | CRI 90
8170M

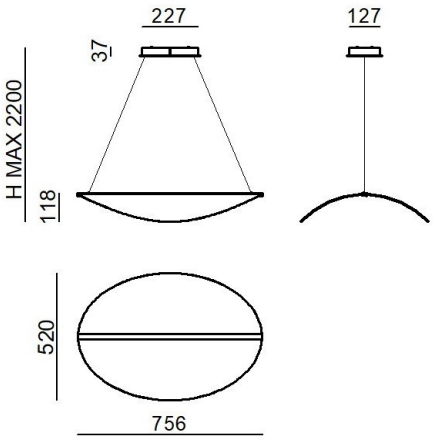

Technische Daten	
Designer	Mirco Crosatto
Jahr der Verwirklichung	2016
Typ	Pendelleuchte
Installationsposition	Decke
Installationsumgebung	Indoor
Lichtquelle	LED
Circuit structure	topLED
Optik	Diffuses
Light emission direction	downward and upward
Lampe Nennleistung	36 W DC
Gesamtleistung	40 W
Lichtstrom (Lichtquelle)	4062 lm
Nominale Eingangsspannung	220 - 240 V AC
Eingangsspannungsbereich	220 - 240 V AC
Frequency	60 - 50 Hz
Ähnlichste Farbtemperatur / Tone	2700 K
Farbwiedergabeindex	90 Ra
Gleichstrom/Gleichspannung	AC
Isolierklasse	1
IP	IP20
Glühdrahtprüfung	650°
Direkte Montage auf normal entflammbaren Oberflächen	Ja
CE	Ja
Einschließlich Driver	Driver
Leuchte dimmbar	DALI-2 - PUSH DIM
Schwenkbarkeit	Nein
Drehbarkeit	Nein
Begehbarkeit	Nein
Überrollbarkeit	Nein
Einschließlich Kabel	Ja
Kabellänge	2.2 m
Harzbeschichtung	Nein
Typ Lichtabstrahlung	Zweiflammig
Nettogewicht	2.910 Kg
Schutz vor elektrostatischen Entladungen	Nein
Schutz vor Stoßspannungen	Nein
Optiktechnologie	Optilight TM

Oberfläche Oberfläche Gehäuse	
Material	Aluminium
Farbe	Text white RAL9003
Bearbeitungstyp	Lackierung

Oberfläche Oberfläche diffusor	
Material	PMMA
Farbe	Transparent

Oberfläche Oberfläche fassung	
Material	Metall
Farbe	Text white RAL9003
Bearbeitungstyp	Lackierung

Cables Electrification+suspension	
Max. Kabellänge	2200 mm

Linea Light Group reserves the right, without any advance notice, to change the characteristics of their products, as well as the availability of the same at any time. No product, relative technical data, illustrations and information are binding for Linea Light Group. Linea Light Group will not be held liable for any illustration, text and/or translation\ errors. All values indicated are measured values. There is a +/- 10% tolerance for the flow, CCT and power data.

Pendelleuchte | 220-240 V | 280 topLED 36 W DC - 40 W AC | CRI 90
8170M

Double emission pendant luminaires for indoor application. The super warm white LED light source with a diffused light distribution is composed of 280 topled LEDs with CCT of 2700 K and a CRI 90; the source luminous flux is 4062 lm, with a 112.8 lm/W nominal luminous efficacy.

The device body is made of aluminium and features a text white ral9003 finish, processed by means of coating; the diffuser is made of pmma with a laser engravings treatment; the mounting frame is made of metal, with a text white ral9003 finish, processed by means of coating.

The ingress protection degree is IP20; the total weight is of 2.910 kg.

The total absorbed power is 40 W The power supply cable is included and features a 2.2 m length.

The device features protection class I and can be ceiling-mounted.

Compliant with the EN 60598-1 standard and its specific provisions.

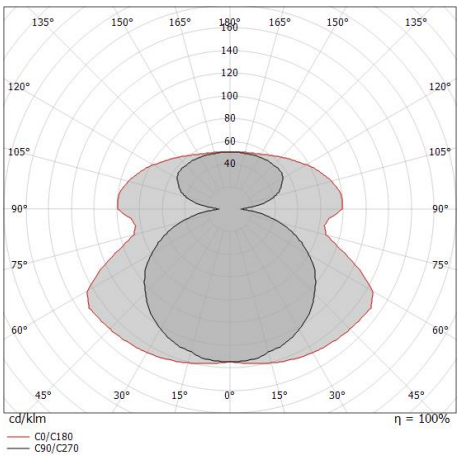

Energieeffizienzklasse
Dieses Produkt enthält 2 Lichtquellen der Energieeffizienzklasse E.

Illuminotechnical Eigenschaften	
Light Output Ratio (LOR)	80 %
Lichtstrom (Lichtquelle)	4062 lm
Leuchten Lichtstrom	3279 lm
Consumption	40 W
Leuchten Lichtausbeute	81 lm/W
Farbtemperatur	2700 K
Standard Deviation of Colour Matching	3 Step MacAdam
Farbwiedergabeindex	90 Ra
Verbindungstemperatur (Leuchte)	80
Standardumgebungstemperatur	25°C

LED Life / Failure Ratio
L70 B10 C0 102000h (at Tj 115 Ta 25)
L90 B10 C0 55000h

UGR	
UGR axial	15.8
UGR transversal	20.4
X=4H | Y=8H	S=0.25H
Reflection factor	70/50/20

OPTICAL	
Optik C90/C270	132°
Optik C0/C180	180°
Light distribution simmetry	Symmetrical 2 assis

Linea Light Group reserves the right, without any advance notice, to change the characteristics of their products, as well as the availability of the same at any time. No product, relative technical data, illustrations and information are binding for Linea Light Group. Linea Light Group will not be held liable for any illustration, text and/or translation\ errors. All values indicated are measured values. There is a +/- 10% tolerance for the flow, CCT and power data.

Diphy_P1 | Pendant Luminaires | Accessories
8170M

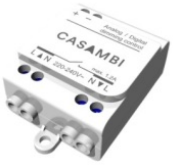

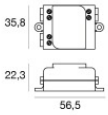

Dimmer - 0-10V, 1-10V oder DALI-Dimmschnittstelle
Bluetooth, 220-240V

Code
KIT0079

Linea Light Group reserves the right, without any advance notice, to change the characteristics of their products, as well as the availability of the same at any time. No product, relative technical data, illustrations and information are binding for Linea Light Group. Linea Light Group will not be held liable for any illustration, text and/or translation\ errors. All values indicated are measured values. There is a +/- 10% tolerance for the flow, CCT and power data.