Periskop RGBW

Scheinwerfer | 1 x powerLED 8 W DC 630 mA
RGBW - 4000
81496Q45

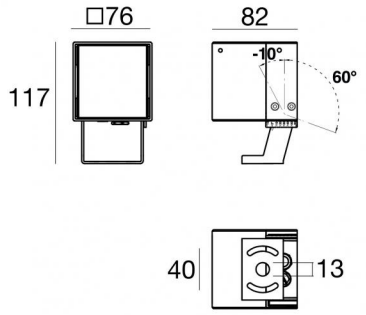

Technische Daten	
Typ	Oberfläche
Installationsposition	Wand - Decke - Boden
Installationsumgebung	Outdoor
Lichtquelle	LED
Circuit structure	powerLED
Optik	Medium Wide Flood
Light emission direction	frontal
Lampe Nennleistung	8 W DC
Lichtstrom (Lichtquelle)	369 lm
Eingangsspannungsbereich	630mA
Ähnlichste Farbtemperatur / Tone	RGBW - 4000 K
Gleichstrom/Gleichspannung	CC
Isolierklasse	3
IP	IP66
IK	IK09
Glühdrahtprüfung	850°
Direkte Montage auf normal entflammbaren Oberflächen	Ja
CE	Ja
Einschließlich Driver	Nein
Leuchte dimmbar	Ja
Schwenkbarkeit	Orientabile
Gesamtwinkel (vertikale Ebene)	70 °
Drehbarkeit	Nein
Begehbarkeit	Nein
Überrollbarkeit	Nein
Einschließlich Kabel	Ja
Kabellänge	1 m
Harzbeschichtung	Nein
Typ Lichtabstrahlung	Einflammig
Nettogewicht	0.8 Kg
Schutz vor elektrostatischen Entladungen	Nein
Schutz vor Stoßspannungen	Nein
Technische Merkmale des Produkts	TCS

Oberfläche Oberfläche Gehäuse	
Material	Stranggepresstes Aluminium EN AB - 46100
Farbe	Dark brown
Bearbeitungstyp	Offenporige Anodisierung + Pulverlackierung

Oberfläche Oberfläche diffusor	
Material	Extra-helles Glas - Gehärtet
Farbe	transparent
Bearbeitungstyp	Siebdruck

Oberfläche Oberfläche bügel	
Material	Stahl AISI 304
Farbe	Text black RAL9005
Bearbeitungstyp	Pulverbeschichtung mit duroplastischen Pulvern

Elektronik

99333
DMX Multi Channel and Power 4ch. 24~48V DC (1 - 3 art.)

Cables Electrification	
Cable connector	No

Nennlichtstrom für eine einzelne Farbe - RGBW - 4000K

N. Led	Rot	Grün	Blau	Weiß
1	74 lm	121 lm	21 lm	153 lm

Linea Light Group reserves the right, without any advance notice, to change the characteristics of their products, as well as the availability of the same at any time. No product, relative technical data, illustrations and information are binding for Linea Light Group. Linea Light Group will not be held liable for any illustration, text and/or translation\ errors. All values indicated are measured values. There is a +/- 10% tolerance for the flow, CCT and power data.

Scheinwerfer | 1 x powerLED 8 W DC 630 mA | RGBW - 4000
81496Q45

Single emission projectors for outdoor application. The RGBW - 4000 K LED light source with a medium wide flood light distribution is composed of 1 powerled LEDs with CCT of RGB-W 4000 K the source luminous flux is 369 lm, with a 46.1 lm/W nominal luminous efficacy.

Product suitable for installations in coastal areas with high salinity and strong exposure to atmospheric agents.

The device body is made of die-cast aluminium en ab - 46100 and features a dark brown finish, processed by means of open pore anodizing + powder coating; the diffuser is made of extra clear glass - tempered with a silk-screening treatment. Surface treatment of the product body through aluminum chemical conversion, followed by polyester powder coating, using exclusively coatings compliant with the Qualicoat standard.

The ingress protection degree is IP66; the total weight is of 0.8 kg. The power supply driver is not provided and is to be ordered separately.

The total absorbed power is 8 W The power supply cable is included and features a 1 m length.

The device features protection class III and can be wall lights, ceiling or floor-mounted.

Compliant with the EN 60598-1 standard and its specific provisions.

Energieeffizienzklasse
Dieses Produkt enthält eine Lichtquelle der Energieeffizienzklasse G.

Standardumgebungstemperatur	-20 / +50°C
Typische Temperatur am Glas	40°C

LED Life / Failure Ratio
L70 B10 C0 202460h (at Tj 60 Ta 25)

Linea Light Group reserves the right, without any advance notice, to change the characteristics of their products, as well as the availability of the same at any time. No product, relative technical data, illustrations and information are binding for Linea Light Group. Linea Light Group will not be held liable for any illustration, text and/or translation\ errors. All values indicated are measured values. There is a +/- 10% tolerance for the flow, CCT and power data.

Periskop RGBW | Projectors | Accessories
81496Q45

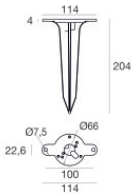

Erdspießen
installationsposition: terreno,Material Verkleidung: pc

Code
98549

Blendschutz - Blendschutzschirm
Blendschutzart: palpebra.
Material:Stahl AISI 304, farbe:Text black RAL9005, bearbeitungstyp :Pulverbeschichtung mit duroplastischen Pulvern.

Code
98966

Befestigungssatz - Befestigungsgurt zur Montage am Baum – Länge 5 Meter
Material:Edelstahl AISI 316, farbe:Stahl.

Code
99802

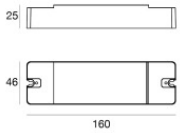

Dimmer - Dimmung über Funkfernbedienung, einzelnen N/O?Taster oder Wi Fi?Netzwerk (Tuya Smart APP). Gerät mit 4 Kanälen: Der erste Dip?Schalter ist für die Stromauswahl vorgesehen, der zweite Dip?Schalter für die Konfiguration: MONO, DYNAMIC, RGB, RGBW. Schutz gegen Übertemperatur, Überlastung, Leitungsunterbrechung und Kurzschluss an der Ausgangsleitung.
RF Remote controller

Code
C-E700003

Linea Light Group reserves the right, without any advance notice, to change the characteristics of their products, as well as the availability of the same at any time. No product, relative technical data, illustrations and information are binding for Linea Light Group. Linea Light Group will not be held liable for any illustration, text and/or translation\ errors. All values indicated are measured values. There is a +/- 10% tolerance for the flow, CCT and power data.