Pendelleuchte - Industriebeleuchtung | 198-264 V
topLED 63 W DC - 70 W AC | CRI 80
80940A00





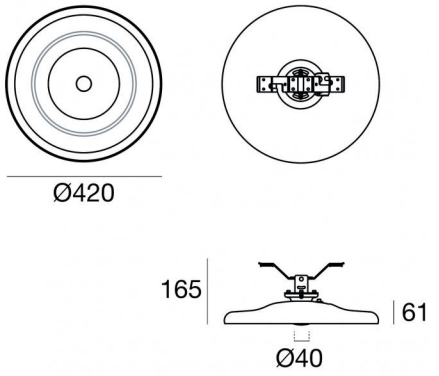

Technische Daten	
Typ	Pendelleuchte - Industriebeleuchtung
Installationsposition	Kabel
Installationsumgebung	Outdoor
Lichtquelle	LED
Circuit structure	topLED
Optik	Diffuses
Light emission direction	downward
Lampe Nennleistung	63 W DC
Gesamtleistung	70 W
Lichtstrom (Lichtquelle)	8510 lm
Nominale Eingangsspannung	220 - 240 V AC
Eingangsspannungsbereich	198 - 264 V AC
Frequency	50 - 60 Hz
Ähnlichste Farbtemperatur / Tone	2200 K
Farbwiedergabeindex	80 Ra
Gleichstrom/Gleichspannung	AC
Isolierklasse	2
IP	IP66
IK	IK08
Glühdrahtprüfung	850°
Direkte Montage auf normal entflammbaren Oberflächen	Ja
CE	Ja
Einschließlich Driver	Driver
Leuchte dimmbar	Autocontrol - Automatisches Dimmen
Schwenkbarkeit	Nein
Drehbarkeit	Nein
Begehbarkeit	Nein
Überrollbarkeit	Nein
Einschließlich Kabel	Ja
Kabellänge	1 m
Harzbeschichtung	Nein
Typ Lichtabstrahlung	Einflammig
Oberfläche Seitenwind ausgesetzt	0,025 m²
Oberfläche dem Wind ausgesetzt - Plan	0,14 m²
Nettogewicht	6.3 Kg
Schutz vor elektrostatischen Entladungen	Ja
Schutz vor Stoßspannungen	5 KV

Oberfläche Oberfläche Gehäuse	
Material	Stranggepresstes Aluminium EN AB - 46100
Farbe	Grau
Bearbeitungstyp	Pulverbeschichtung mit duroplastischen Pulvern

Oberfläche Oberfläche diffusor	
Material	Gehärtetes Glas
Farbe	sandgestrahltem weiß

Linea Light Group reserves the right, without any advance notice, to change the characteristics of their products, as well as the availability of the same at any time. No product, relative technical data, illustrations and information are binding for Linea Light Group. Linea Light Group will not be held liable for any illustration, text and/or translation\ errors. All values indicated are measured values. There is a +/- 10% tolerance for the flow, CCT and power data.

Pendelleuchte - Industriebeleuchtung | 198-264 V | topLED 63 W DC - 70 W AC | CRI 80
80940A00

Single emission pendant luminaires for outdoor application. The ancient white LED light source with a diffused light distribution is composed of 216 topled LEDs with CCT of 2200 K and a CRI 80; the source luminous flux is 8510 lm, with a 135.1 lm/W nominal luminous efficacy.

The device body is made of die-cast aluminium en ab - 46100 and features a grey finish, processed by means of powder coating with thermosetting powders; the diffuser is made of glass - tempered.

The ingress protection degree is IP66; the total weight is of 6.3 kg.

The total absorbed power is 70 W The power supply cable is included and features a 1 m length.

The device features protection class II and can be cable-mounted.

Compliant with the EN 60598-1 standard and its specific provisions.

Energieeffizienzklasse
Dieses Produkt enthält 2 Lichtquellen der Energieeffizienzklasse E.

Illuminotechnical Eigenschaften	
Lichtstrom (Lichtquelle)	8510 lm
Farbtemperatur	2200 K
Standard Deviation of Colour Matching	3 Step MacAdam
Farbwiedergabeindex	80 Ra
Standardumgebungstemperatur	-20 / +50°C

LED Life / Failure Ratio
L70 B10 C0 145600h (at Tj 65 Ta 25)
L80 B10 C0 92440h (at Tj 65 Ta 25)
L90 B10 C0 45500h (at Tj 65 Ta 25)

Linea Light Group reserves the right, without any advance notice, to change the characteristics of their products, as well as the availability of the same at any time. No product, relative technical data, illustrations and information are binding for Linea Light Group. Linea Light Group will not be held liable for any illustration, text and/or translation\ errors. All values indicated are measured values. There is a +/- 10% tolerance for the flow, CCT and power data.

Autocontrol system

Autonomous lamp post head

The Autocontrol system makes it so that autonomous street lights are able to automatically adjust the luminous flow based on the selected programming depending on the technical lighting needs. The system works in combination with a timer or a twilight switch upstream of the system which determines the daily hours of operation. Generally, the operating time is divided into 5 time slots, proportional in percentage to the duration of the night. This time is stored by the power supply and used to determine the hours of operation in the various time slots of the following day.



Duration time slot	30% of Night	20% of Night	20% of Night	20% of Night	10% of Night	Off
Power exercised based on the current used	100% = 600mA	80% = 500mA	60% = 380mA	40% = 250mA	100% = 600mA	Off
Variation of the brightness based on the current	100%	84%	65%	46%	100%	Off

Lighting Schedule Customization

Time slots and corresponding light intensity can be customized in agreement with the customer **prior to shipment of the luminaire.** The agreed parameters must be communicated to **Linea Light Group**, which will program the luminaire according to the requested specifications. **Programming cannot be modified after installation.**

Examples of operation

Dimming varies according to the season of the year and latitude of the location. Below are two examples of operation in periods of the year that differ in number of night hours. With the Autocontrol system, a daily energy savings can be achieved that varies between 20% and 25%.

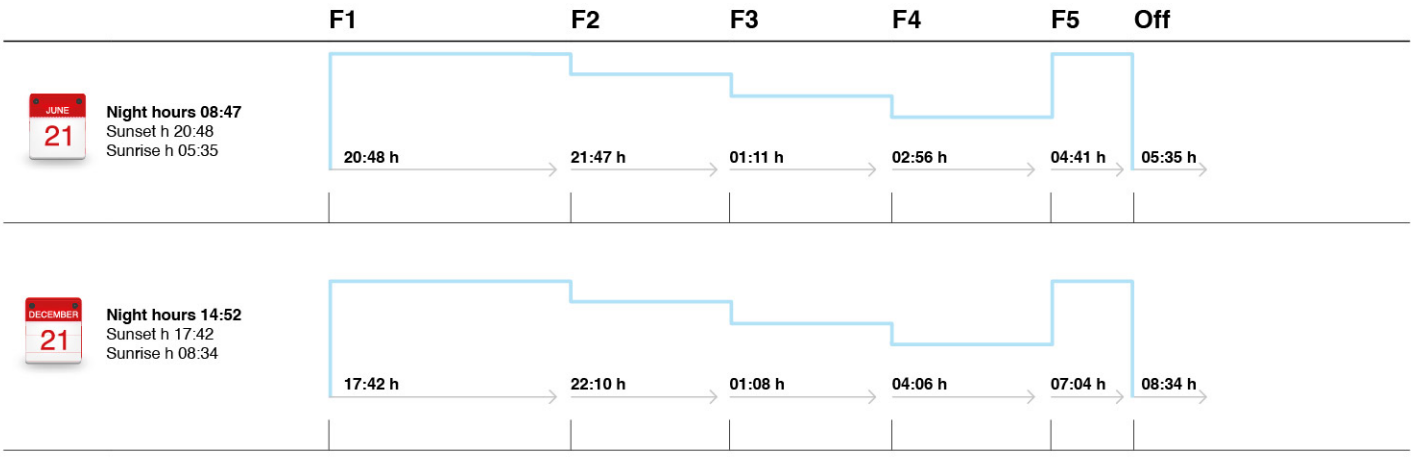

NOTE: it is not possible to set an exact time within a given time slot

Linea Light Group reserves the right, without any advance notice, to change the characteristics of their products, as well as the availability of the same at any time. No product, relative technical data, illustrations and information are binding for Linea Light Group. Linea Light Group will not be held liable for any illustration, text and/or translation\ errors. All values indicated are measured values. There is a +/- 10% tolerance for the flow, CCT and power data.