Downlights | 1 x powerLED 4 W DC 350 mA | CRI 80

80845M60



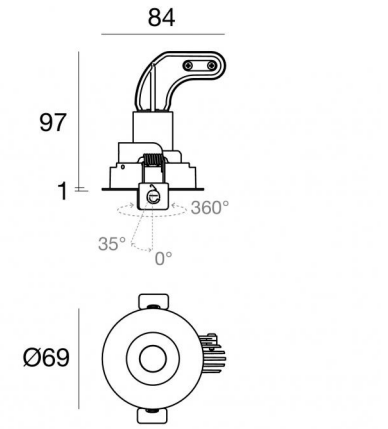



62

Technische Daten	
Installationsposition	Decke
Installationsumgebung	Indoor
Lichtquelle	LED
Circuit structure	powerLED
Optik	Medium Wide Flood
Light emission direction	downward
Lampe Nennleistung	4 W DC
Lichtstrom (Lichtquelle)	490 lm
Eingangsspannungsbereich	350mA
Ähnlichste Farbtemperatur / Tone	2700 K
Farbwiedergabeindex	80 Ra
Gleichstrom/Gleichspannung	CC
Isolierklasse	3
IP	IP44
IP optisches System	IP65
IK	IK08
Glühdrahtprüfung	850°
Direkte Montage auf normal entflammbaren Oberflächen	Ja
CE	Ja
Einschließlich Driver	Nein
Leuchte dimmbar	DALI - 1-10V
Schwenkbarkeit	Nein
Drehbarkeit	Ja
Gesamtwinkel (horizontale Ebene)	350 °
Gesamtwinkel (vertikale Ebene)	35 °
Begehbarkeit	Nein
Überrollbarkeit	Nein
Einschließlich Kabel	Ja
Kabellänge	0.170 m
Harzbeschichtung	Nein
Einbautiefe	97 mm
Typ Lichtabstrahlung	Einflammig
Nettogewicht	0.190 Kg
Schutz vor elektrostatischen Entladungen	Nein
Schutz vor Stoßspannungen	Nein
Optiktechnologie	Honey comb
Technische Merkmale des Produkts	TVS

Oberfläche Oberfläche Gehäuse	
Material	Aluminiumlegierung 6026
Farbe	Text brilliant grey RAL 9006
Bearbeitungstyp	Pulverbeschichtung mit duroplastischen Pulvern

Oberfläche Oberfläche diffusor	
Material	UV beständiges Polycarbonat
Farbe	Transparent

Oberfläche Oberfläche strahler	
Material	Stranggepresstes Aluminium EN AB - 46100
Farbe	Aluminium
Bearbeitungstyp	Polieren

Elektronik



99115
1-10V - N/O button Multi Power 198~264V AC / V DC (1 - 3 art.)



99114
DALI - Push and Simply Dim Multi Power 198~264V AC / 180~275V DC (1 - 3 art.)



89145
On/Off Driver 198~264V AC / 180~275V DC (1 art.)

Cables Electrification	
Cable connector	No

Linea Light Group reserves the right, without any advance notice, to change the characteristics of their products, as well as the availability of the same at any time. No product, relative technical data, illustrations and information are binding for Linea Light Group. Linea Light Group will not be held liable for any illustration, text and/or translation\ errors. All values indicated are measured values. There is a +/- 10% tolerance for the flow, CCT and power data.

Downlights | 1 x powerLED 4 W DC 350 mA | CRI 80
80845M60

Single emission recessed downlights for indoor application. The super warm white LED light source with a medium wide flood light distribution is composed of 1 powerled LEDs with CCT of 2700 K and a CRI 80; the source luminous flux is 490 lm, with a 122.5 lm/W nominal luminous efficacy.

The device body is made of aluminium alloy 6026 and features a text brilliant grey ral 9006 finish, processed by means of powder coating with thermosetting powders; the diffuser is made of uv resistant polycarbonate.

The ingress protection degree is IP44; the total weight is of 0.190 kg. The power supply driver is not provided and is to be ordered separately.

The total absorbed power is 4 W The power supply cable is included and features a 0.170 m length.

The device features protection class III and can be ceiling-mounted, with a 62 mm diameter hole (in plasterboard).

Compliant with the EN 60598-1 standard and its specific provisions.

Energieeffizienzklasse
Dieses Produkt enthält eine Lichtquelle der Energieeffizienzklasse E.

Illuminotechnical Eigenschaften	
Light Output Ratio (LOR)	33 %
Lichtstrom (Lichtquelle)	490 lm
Leuchten Lichtstrom	163 lm
Farbtemperatur	2700 K
Standard Deviation of Colour Matching	3 Step MacAdam
Farbwiedergabeindex	80 Ra
Black Body Locus	On
Standardumgebungstemperatur	-20 / +50°C
Typische Temperatur am Glas	40°C

LED Life / Failure Ratio
L70 B10 C0 716641h (at Tj 65 Ta 25)
L80 B10 C0 445035h (at Tj 65 Ta 25)
L90 B10 C0 205461h (at Tj 65 Ta 25)

UGR	
UGR axial	19.4
UGR transversal	19.2
X=4H | Y=8H	S=0.25H
Reflection factor	70/50/20

OPTICAL	
Optik C0/C180	42°
Light distribution simmetry	Symmetrical

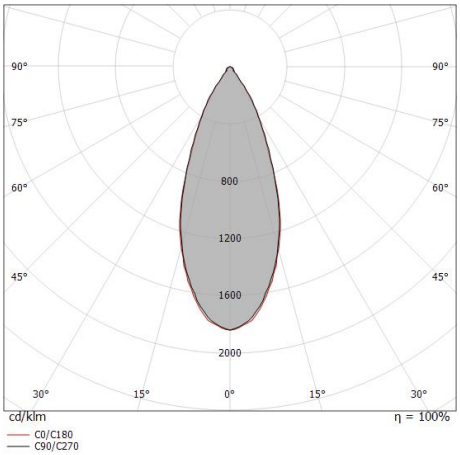

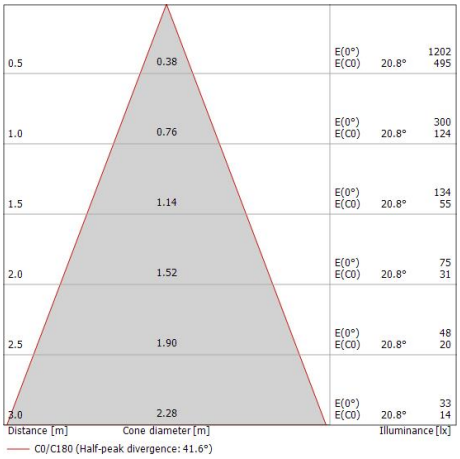

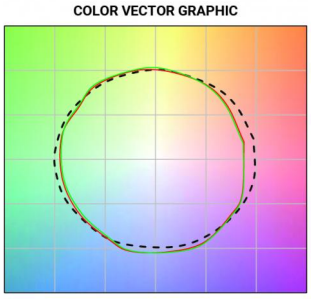

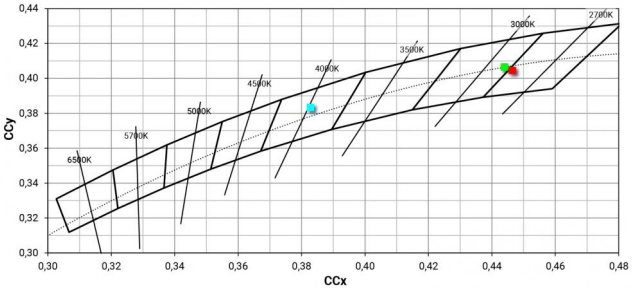

Linea Light Group reserves the right, without any advance notice, to change the characteristics of their products, as well as the availability of the same at any time. No product, relative technical data, illustrations and information are binding for Linea Light Group. Linea Light Group will not be held liable for any illustration, text and/or translation\ errors. All values indicated are measured values. There is a +/- 10% tolerance for the flow, CCT and power data.