Suelo_RXJ

Uplights | 198-264 V
1 arrayLED 13 W DC - 15 W AC | CRI 80
80613M15

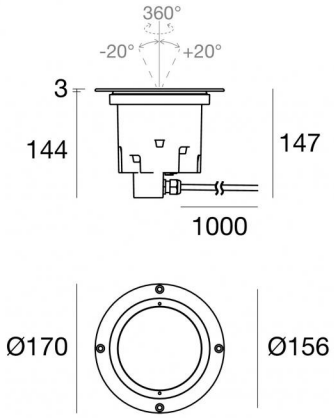

Technische Daten	
Typ	Überrollbar
Installationsposition	Boden
Installationsumgebung	Outdoor
Lichtquelle	LED
Circuit structure	arrayLED
Optik	Spot
Light emission direction	upward
Lampe Nennleistung	13 W DC
Gesamtleistung	15 W
Lichtstrom (Lichtquelle)	1724 lm
Nominale Eingangsspannung	220 - 240 V AC
Eingangsspannungsbereich	198 - 264 V AC
Frequency	50 - 60 Hz
Ähnlichste Farbtemperatur / Tone	2700 K
Farbwiedergabeindex	80 Ra
Gleichstrom/Gleichspannung	AC
Isolierklasse	1
IP	IP68
Installationsbeschränkung	Nicht für Einsatz unter Wasser
IK	IK10
Glühdrahtprüfung	850°
Direkte Montage auf normal entflammbaren Oberflächen	Ja
CE	Ja
Einschließlich Driver	Driver
Leuchte dimmbar	Nein
Schwenkbarkeit	Nein
Drehbarkeit	Ja
Gesamtwinkel (horizontale Ebene)	360 °
Gesamtwinkel (vertikale Ebene)	+/- 20 °
Begehbarkeit	Ja
Überrollbarkeit	2500 Kg
Einschließlich Kabel	Ja
Kabellänge	1 m
Harzbeschichtung	Ja
Einbautiefe	144 mm
Typ Lichtabstrahlung	Einflammig
Nettogewicht	1,8 Kg
Schutz vor elektrostatischen Entladungen	Ja
Schutz vor Stoßspannungen	4 KV
Technische Merkmale des Produkts	Acquastop

Oberfläche Oberfläche Gehäuse	
Material	Stranggepresstes Aluminium EN AB - 46100
Farbe	Matt black (R9005)
Bearbeitungstyp	Offenporige Anodisierung + Pulverlackierung

Oberfläche Oberfläche diffusor	
Material	Extra-helles Glas - Gehärtet
Farbe	transparent
Bearbeitungstyp	Siebdruck

Oberfläche Oberfläche flansch	
Material	Edelstahl AISI 316
Farbe	Stahl
Bearbeitungstyp	Bürsten

Cables Electrification	
Cable connector	No

Linea Light Group reserves the right, without any advance notice, to change the characteristics of their products, as well as the availability of the same at any time. No product, relative technical data, illustrations and information are binding for Linea Light Group. Linea Light Group will not be held liable for any illustration, text and/or translation\ errors. All values indicated are measured values. There is a +/- 10% tolerance for the flow, CCT and power data.

Uplights | 198-264 V | 1 arrayLED 13 W DC - 15 W AC | CRI 80
80613M15

Single emission uplights for outdoor application. The super warm white LED light source with a spot light distribution is composed of 1 arrayled LEDs with CCT of 2700 K and a CRI 80; the source luminous flux is 1724 lm, with a 132.6 lm/W nominal luminous efficacy.

The device body is made of die-cast aluminium en ab - 46100 and features a matt black (r9005) finish, processed by means of open pore anodizing + powder coating; the diffuser is made of extra clear glass - tempered with a silk-screening treatment. Surface treatment of the product body through aluminum chemical conversion, followed by polyester powder coating, using exclusively coatings compliant with the Qualicoat standard.The product flange is made of steel, a material that ensures high robustness, superior mechanical strength and extended durability, guaranteeing maximum component reliability over time.

The ingress protection degree is IP68;

The total absorbed power is 15 W The power supply cable is included and features a 1 m length.

The device features protection class I and can be floor-mounted with an outer casing, code 84933(for concrete or masonry).

Compliant with the EN 60598-1 standard and its specific provisions.

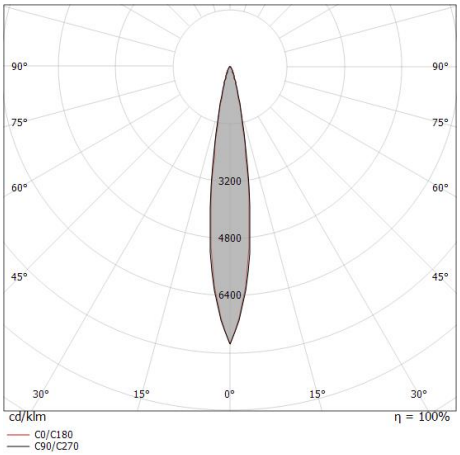

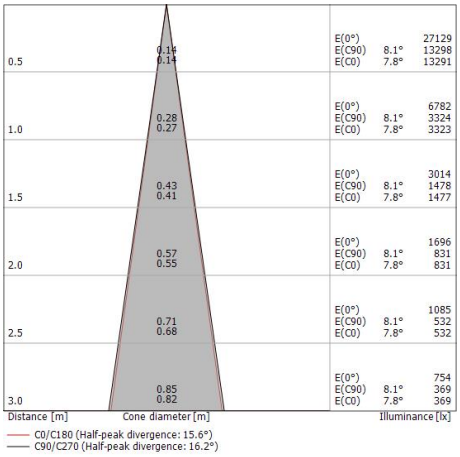

Energieeffizienzklasse
Dieses Produkt enthält eine Lichtquelle der Energieeffizienzklasse F.

Illuminotechnical Eigenschaften	
Light Output Ratio (LOR)	50 %
Lichtstrom (Lichtquelle)	1724 lm
Leuchten Lichtstrom	876 lm
Consumption	15 W
Leuchten Lichtausbeute	58 lm/W
Farbtemperatur	2700 K
Standard Deviation of Colour Matching	2 Step MacAdam
Farbwiedergabeindex	80 Ra
Black Body Locus	On
Standardumgebungstemperatur	-20 / +50°C
Typische Temperatur am Glas	45°C

LED Life / Failure Ratio
L70 B10 C0 252000h (at Tj 65 Ta 25)

UGR	
UGR axial	14.2
UGR transversal	14.1
X=4H | Y=8H	S=0.25H
Reflection factor	70/50/20

OPTICAL	
Optik C0/C180	16°
Light distribution simmetry	Symmetrical

COLOR VECTOR GRAPHIC

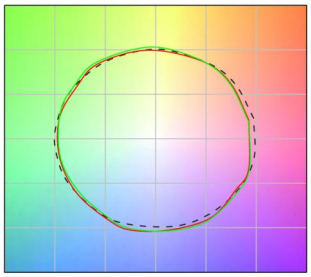

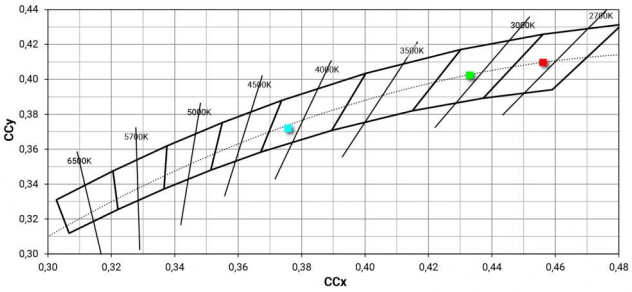

Linea Light Group reserves the right, without any advance notice, to change the characteristics of their products, as well as the availability of the same at any time. No product, relative technical data, illustrations and information are binding for Linea Light Group. Linea Light Group will not be held liable for any illustration, text and/or translation\ errors. All values indicated are measured values. There is a +/- 10% tolerance for the flow, CCT and power data.

Suelo_RXJ | Uplights | Accessories
80613M15

Einbaugehäuse

Typ Installation: mauerwerk L=155mm, H=170mm, D=170mm

Code
84933

Linea Light Group reserves the right, without any advance notice, to change the characteristics of their products, as well as the availability of the same at any time. No product, relative technical data, illustrations and information are binding for Linea Light Group. Linea Light Group will not be held liable for any illustration, text and/or translation\ errors. All values indicated are measured values. There is a +/- 10% tolerance for the flow, CCT and power data.