Downlights | 1 x powerLED 6 W DC 500 mA | CRI 90

80023M15





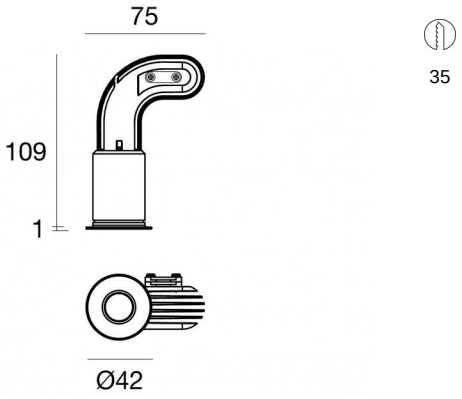

Technische Daten	
Jahr der Verwirklichung	2023
Installationsposition	Decke
Installationsumgebung	Indoor
Lichtquelle	LED
Circuit structure	powerLED
Optik	Spot
Light emission direction	downward
Lampe Nennleistung	6 W DC
Lichtstrom (Lichtquelle)	532 lm
Eingangsspannungsbereich	500mA
Ähnlichste Farbtemperatur / Tone	2700 K
Farbwiedergabeindex	90 Ra
Gleichstrom/Gleichspannung	CC
Isolierklasse	3
IP	IP44
IP optisches System	IP65
Glühdrahtprüfung	850°
Direkte Montage auf normal entflammbaren Oberflächen	Ja
CE	Ja
Einschließlich Driver	Nein
Leuchte dimmbar	DALI - 1-10V
Schwenkbarkeit	Nein
Drehbarkeit	Nein
Begehbarkeit	Nein
Überrollbarkeit	Nein
Einschließlich Kabel	Ja
Kabellänge	0.170 m
Harzbeschichtung	Nein
Einbautiefe	109 mm
Typ Lichtabstrahlung	Einflammig
Nettogewicht	0.128 Kg
Schutz vor elektrostatischen Entladungen	Nein
Schutz vor Stoßspannungen	Nein
Optiktechnologie	F.O.L.
Technische Merkmale des Produkts	TVS

Oberfläche Oberfläche Gehäuse	
Material	Aluminiumlegierung 6026
Farbe	Text white RAL9003
Bearbeitungstyp	Pulverbeschichtung mit duroplastischen Pulvern

Oberfläche Oberfläche diffusor	
Material	UV beständiges Polycarbonat
Farbe	Transparent

Oberfläche Oberfläche strahler	
Material	Stranggepresstes Aluminium EN AB - 46100
Farbe	Aluminium
Bearbeitungstyp	Polieren

Elektronik



99106
On/Off Driver 198~264V AC (2 - 3 art.)



99377
On/Off Driver 198~264V AC (1 art.)



99714
1-10V Controller (1 art.)



99715
DALI Controller 198~264V AC / 180~275V DC (1 art.)

Cables Electrification	
Cable connector	No

Linea Light Group reserves the right, without any advance notice, to change the characteristics of their products, as well as the availability of the same at any time. No product, relative technical data, illustrations and information are binding for Linea Light Group. Linea Light Group will not be held liable for any illustration, text and/or translation\ errors. All values indicated are measured values. There is a +/- 10% tolerance for the flow, CCT and power data.

Downlights | 1 x powerLED 6 W DC 500 mA | CRI 90
80023M15

Single emission recessed downlights for indoor application. The super warm white LED light source with a spot light distribution is composed of 1 powerled LEDs with CCT of 2700 K and a CRI 90; the source luminous flux is 532 lm, with a 88.7 lm/W nominal luminous efficacy.

The device body is made of aluminium alloy 6026 and features a text white ral9003 finish, processed by means of powder coating with thermosetting powders; the diffuser is made of uv resistant polycarbonate.

The ingress protection degree is IP44; the total weight is of 0.128 kg. The power supply driver is not provided and is to be ordered separately.

The total absorbed power is 6 W The power supply cable is included and features a 0.170 m length.

The device features protection class III and can be ceiling-mounted, with a 35 mm diameter hole (in plasterboard).

Compliant with the EN 60598-1 standard and its specific provisions.

Energieeffizienzklasse
Dieses Produkt enthält eine Lichtquelle der Energieeffizienzklasse F.

Illuminotechnical Eigenschaften	
Light Output Ratio (LOR)	67 %
Lichtstrom (Lichtquelle)	532 lm
Leuchten Lichtstrom	361 lm
Consumption	6 W
Leuchten Lichtausbeute	60 lm/W
Farbtemperatur	2700 K
Standard Deviation of Colour Matching	3 Step MacAdam
Farbwiedergabeindex	90 Ra
Standardumgebungstemperatur	-20 / +50°C
Typische Temperatur am Glas	40°C

LED Life / Failure Ratio
L70 B10 C0 716641h (at Tj 65 Ta 25)
L80 B10 C0 445035h (at Tj 65 Ta 25)
L90 B10 C0 205461h (at Tj 65 Ta 25)

UGR	
UGR axial	20.9
UGR transversal	20.8
X=4H | Y=8H	S=0.25H
Reflection factor	70/50/20

OPTICAL	
Optik C0/C180	15°
Light distribution simmetry	Symmetrical

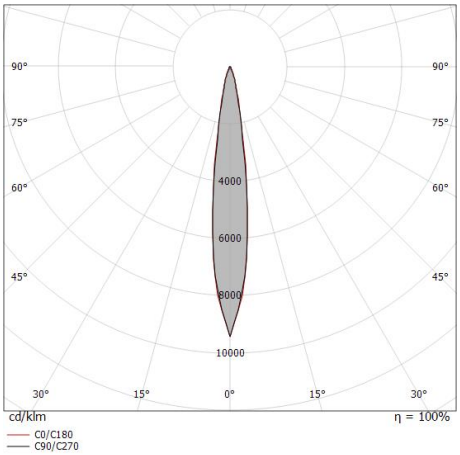

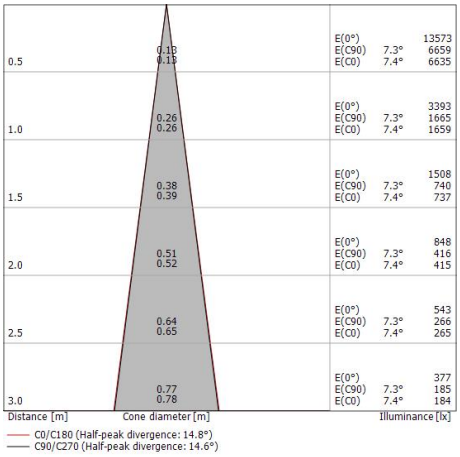

Linea Light Group reserves the right, without any advance notice, to change the characteristics of their products, as well as the availability of the same at any time. No product, relative technical data, illustrations and information are binding for Linea Light Group. Linea Light Group will not be held liable for any illustration, text and/or translation\ errors. All values indicated are measured values. There is a +/- 10% tolerance for the flow, CCT and power data.