Quad_W

Wandleuchten | 198-264 V
21 topLED 9 W DC - 11 W AC | CRI 90
7753

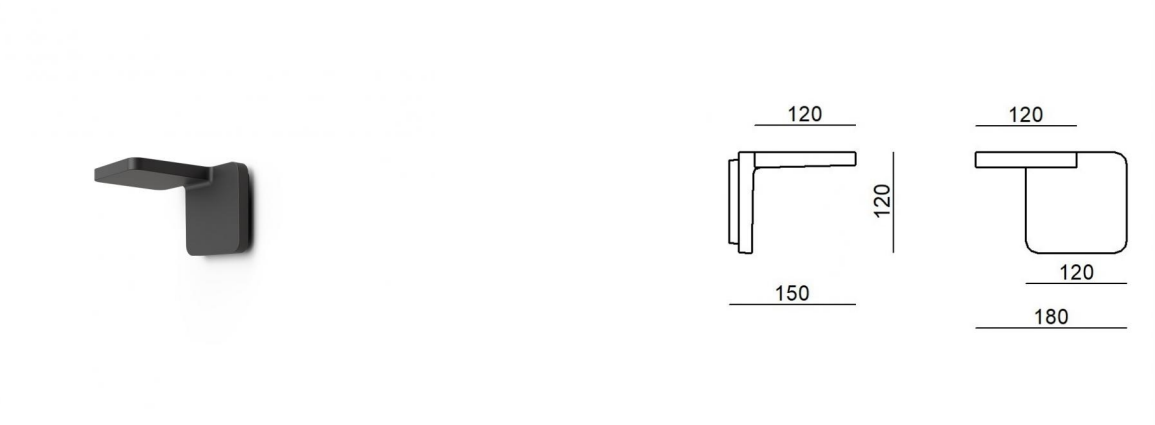

Technische Daten	
Designer	Pio e Tito Toso
Jahr der Verwirklichung	2016
Typ	Wandleuchten
Installationsposition	Wand
Installationsumgebung	Indoor
Lichtquelle	LED
Circuit structure	topLED
Optik	Diffuses
Light emission direction	upward
Lampe Nennleistung	9 W DC
Gesamtleistung	11 W
Lichtstrom (Lichtquelle)	1301 lm
Nominale Eingangsspannung	220 - 240 V AC
Eingangsspannungsbereich	198 - 264 V AC
Frequency	50 - 60 Hz
Ähnlichste Farbtemperatur / Tone	3000 K
Farbwiedergabeindex	90 Ra
Gleichstrom/Gleichspannung	AC
Isolierklasse	1
IP	IP40
Glühdrahtprüfung	850°
Direkte Montage auf normal entflammbaren Oberflächen	Ja
CE	Ja
Einschließlich Driver	Driver
Leuchte dimmbar	Phase cut
Schwenkbarkeit	Nein
Drehbarkeit	Nein
Begehbarkeit	Nein
Überrollbarkeit	Nein
Einschließlich Kabel	Nein
Harzbeschichtung	Nein
Typ Lichtabstrahlung	Einflammig
Nettogewicht	0.7 Kg
Schutz vor elektrostatischen Entladungen	Nein
Schutz vor Stoßspannungen	Nein

Oberfläche Oberfläche Gehäuse	
Material	Aluminium
Farbe	Text black RAL9005
Bearbeitungstyp	Lackierung

Oberfläche Oberfläche diffusor	
Material	PC
Farbe	Transparent

Linea Light Group reserves the right, without any advance notice, to change the characteristics of their products, as well as the availability of the same at any time. No product, relative technical data, illustrations and information are binding for Linea Light Group. Linea Light Group will not be held liable for any illustration, text and/or translation\ errors. All values indicated are measured values. There is a +/- 10% tolerance for the flow, CCT and power data.

Wandleuchten | 198-264 V | 21 topLED 9 W DC - 11 W AC | CRI 90
7753

Single emission wall lights for indoor application. The warm white LED light source with a diffused light distribution is composed of 21 topled LEDs with CCT of 3000 K and a CRI 90; the source luminous flux is 1301 lm, with a 144.6 lm/W nominal luminous efficacy.

The device body is made of aluminium and features a text black ral9005 finish, processed by means of coating; the diffuser is made of PC.

The ingress protection degree is IP40; the total weight is of 0.7 kg.

The total absorbed power is 11 W

The device features protection class I and can be wall lights-mounted.

Compliant with the EN 60598-1 standard and its specific provisions.

Energieeffizienzklasse
Dieses Produkt enthält eine Lichtquelle der Energieeffizienzklasse E.

Illuminotechnical Eigenschaften	
Light Output Ratio (LOR)	88 %
Lichtstrom (Lichtquelle)	1301 lm
Leuchten Lichtstrom	1155 lm
Consumption	11 W
Leuchten Lichtausbeute	105 lm/W
Farbtemperatur	3000 K
Standard Deviation of Colour Matching	3 Step MacAdam
Farbwiedergabeindex	90 Ra
Verbindungstemperatur (Leuchte)	80
Standardumgebungstemperatur	25°C

LED Life / Failure Ratio
L70 B10 C0 102000h (at Tj 115 Ta 25)
L90 B10 C0 55000h

UGR	
UGR axial	31.1
UGR transversal	31.1
X=4H | Y=8H	S=0.25H
Reflection factor	70/50/20

OPTICAL	
Optik C0/C180	112°
Light distribution simmetry	Symmetrical

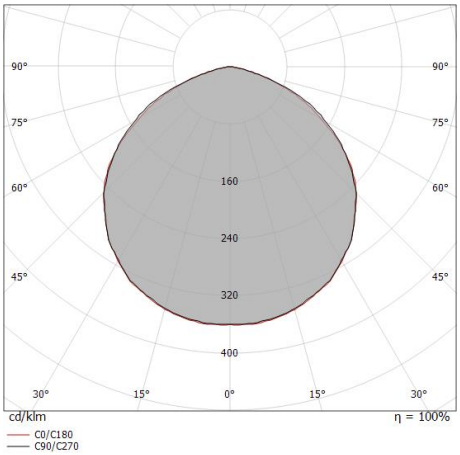

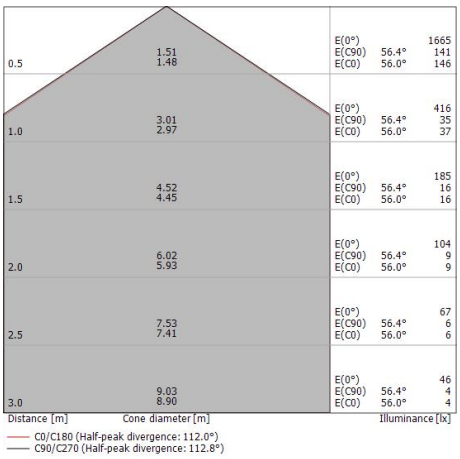

Linea Light Group reserves the right, without any advance notice, to change the characteristics of their products, as well as the availability of the same at any time. No product, relative technical data, illustrations and information are binding for Linea Light Group. Linea Light Group will not be held liable for any illustration, text and/or translation\ errors. All values indicated are measured values. There is a +/- 10% tolerance for the flow, CCT and power data.

Quad_W | Wall Lights | Accessories
7753

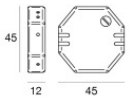

Dimmer - Phasenabschnitt (max. 100 W) – wichtig zum Dimmen der Lampe
220-240V

Code
KIT0026

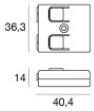

Dimmer - Phasenabschnitt, CASAMBI - Unverzichtbar zum Dimmen der Lampe mit Casambi Radio-frequenza, 85-240V

Code
KIT0080

Linea Light Group reserves the right, without any advance notice, to change the characteristics of their products, as well as the availability of the same at any time. No product, relative technical data, illustrations and information are binding for Linea Light Group. Linea Light Group will not be held liable for any illustration, text and/or translation\ errors. All values indicated are measured values. There is a +/- 10% tolerance for the flow, CCT and power data.