Suelo_R

Uplights | 198-264 V AC /170-276 V DC
1 arrayLED 19 W DC - 22 W AC | CRI 80
77113N50

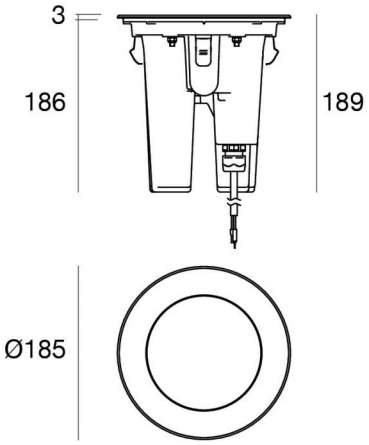

Technische Daten	
Typ	Überrollbar
Installationsposition	Boden
Installationsumgebung	Outdoor
Lichtquelle	LED
Circuit structure	arrayLED
Optik	Medium Wide Flood
Light emission direction	upward
Lampe Nennleistung	19 W DC
Gesamtleistung	22 W
Lichtstrom (Lichtquelle)	3280 lm
Nominale Eingangsspannung	220 - 240 V AC
Eingangsspannungsbereich	198 - 264 V AC
Frequency	50 - 60 Hz
Ähnlichste Farbtemperatur / Tone	4000 K
Farbwiedergabeindex	80 Ra
Gleichstrom/Gleichspannung	AC
Isolierklasse	1
IP	IP68
Installationsbeschränkung	Nicht für Einsatz unter Wasser
IK	IK10
Glühdrahtprüfung	850°
Direkte Montage auf normal entflammbaren Oberflächen	Nein
CE	Ja
Einschließlich Driver	Driver
Leuchte dimmbar	Nein
Schwenkbarkeit	Nein
Drehbarkeit	Nein
Begehbarkeit	Ja
Überrollbarkeit	5000 Kg
Einschließlich Kabel	Ja
Kabellänge	1 m
Harzbeschichtung	Ja
Einbautiefe	186 mm
Typ Lichtabstrahlung	Einflammig
Nettogewicht	3 Kg
Schutz vor elektrostatischen Entladungen	Ja
Schutz vor Stoßspannungen	1.5 KV
Optiktechnologie	Dark light
Technische Merkmale des Produkts	Acquastop

Oberfläche Oberfläche Gehäuse	
Material	Stranggepresstes Aluminium EN AB - 46100
Farbe	Matt black (R9005)
Bearbeitungstyp	Offenporige Anodisierung + Pulverlackierung

Oberfläche Oberfläche diffusor	
Material	Extra-helles Glas - Gehärtet
Farbe	Transparent

Oberfläche Oberfläche flansch	
Material	Edelstahl AISI 316
Farbe	Stahl
Bearbeitungstyp	Bürsten

Cables Electrification	
Cable connector	No connector - Neoprene 3x1mm²

Linea Light Group reserves the right, without any advance notice, to change the characteristics of their products, as well as the availability of the same at any time. No product, relative technical data, illustrations and information are binding for Linea Light Group. Linea Light Group will not be held liable for any illustration, text and/or translation\ errors. All values indicated are measured values. There is a +/- 10% tolerance for the flow, CCT and power data.

Uplights | 198-264 V AC /170-276 V DC | 1 arrayLED 19 W DC - 22 W AC | CRI 80
77113N50

Single emission uplights for outdoor application. The natural white LED light source with a medium wide flood light distribution is composed of 1 arrayled LEDs with CCT of 4000 K and a CRI 80; the source luminous flux is 3280 lm, with a 172.6 lm/W nominal luminous efficacy.

Product suitable for installations in coastal areas with high salinity and strong exposure to atmospheric agents.

The device body is made of die-cast aluminium en ab - 46100 and features a matt black (r9005) finish, processed by means of open pore anodizing + powder coating; the diffuser is made of extra clear glass - tempered. Surface treatment of the product body through aluminum chemical conversion, followed by polyester powder coating, using exclusively coatings compliant with the Qualicoat standard.The product flange is made of steel, a material that ensures high robustness, superior mechanical strength and extended durability, guaranteeing maximum component reliability over time.

The ingress protection degree is IP68; the total weight is of 3 kg.

The total absorbed power is 22 W The power supply cable is included and features a 1 m length.

The device features protection class I and can be floor-mounted with an outer casing, code 83328(for concrete or masonry).

Compliant with the EN 60598-1 standard and its specific provisions.

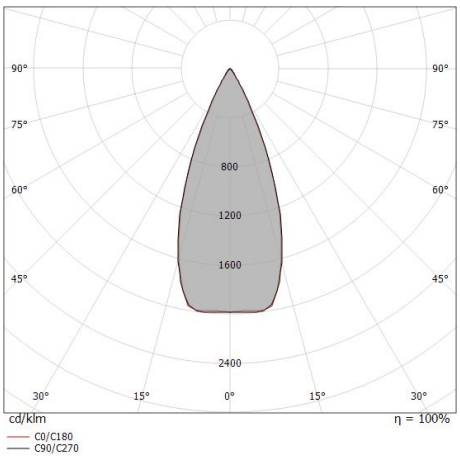

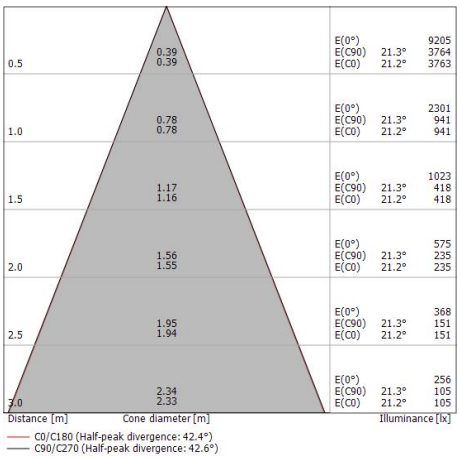

Energieeffizienzklasse
Dieses Produkt enthält eine Lichtquelle der Energieeffizienzklasse D.

Illuminotechnical Eigenschaften	
Light Output Ratio (LOR)	35 %
Lichtstrom (Lichtquelle)	3280 lm
Leuchten Lichtstrom	1160 lm
Consumption	22 W
Leuchten Lichtausbeute	52 lm/W
Farbtemperatur	4000 K
Standard Deviation of Colour Matching	2 Step MacAdam
Farbwiedergabeindex	80 Ra
Standardumgebungstemperatur	-20 / +50°C
Typische Temperatur am Glas	65°C

LED Life / Failure Ratio
L70 B10 C0 237566h (at Tj 65 Ta 25)
L80 B10 C0 148737h
L90 B10 C0 70385h (at Tj 65 Ta 25)

UGR	
UGR axial	10.1
UGR transversal	9.3
X=4H | Y=8H	S=0.25H
Reflection factor	70/50/20

OPTICAL	
Optik C0/C180	42°
Light distribution simmetry	Symmetrical

Linea Light Group reserves the right, without any advance notice, to change the characteristics of their products, as well as the availability of the same at any time. No product, relative technical data, illustrations and information are binding for Linea Light Group. Linea Light Group will not be held liable for any illustration, text and/or translation\ errors. All values indicated are measured values. There is a +/- 10% tolerance for the flow, CCT and power data.

Suelo_R | Uplights | Accessories
77113N50

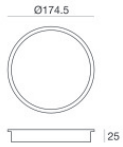

Lochschablone - Schablone zum Zementieren (Für Version mit bündigem Flansch)

Code
83331

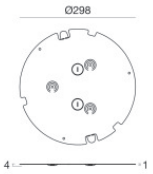

Zubehör für Außengehäuse - Gehäuseboden für Außengehäuse
Material:Verzinktes Eisen, farbe:Grau, bearbeitungstyp :Verzinken.

Code
83330

Einbaugehäuse
installationsposition: boden; typ installation: mauerwerk L=300mm, H=210mm, D=300mm.
Material:Kunststoff ABS, farbe:Black.

Code
83328

Linea Light Group reserves the right, without any advance notice, to change the characteristics of their products, as well as the availability of the same at any time. No product, relative technical data, illustrations and information are binding for Linea Light Group. Linea Light Group will not be held liable for any illustration, text and/or translation\ errors. All values indicated are measured values. There is a +/- 10% tolerance for the flow, CCT and power data.