Skin_WF

Wandleuchten | 198-264 V
10 x powerLED 19.8 W DC - 22 W AC | CRI 80
76978W30



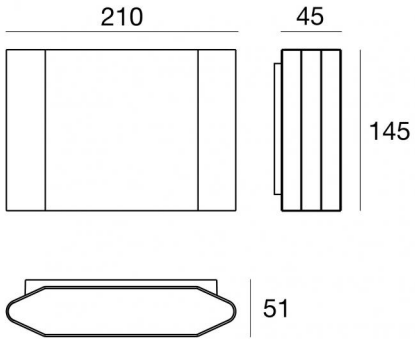

Technische Daten	
Typ	Oberfläche
Installationsposition	Wand
Installationsumgebung	Outdoor
Lichtquelle	LED
Circuit structure	powerLED
Optik	Double Medium Flood
Light emission direction	downward and upward
Lampe Nennleistung	19.8 W DC
Gesamtleistung	22 W
Lichtstrom (Lichtquelle)	2490 lm
Nominale Eingangsspannung	220 - 240 V AC
Eingangsspannungsbereich	198 - 264 V AC
Frequency	50 - 60 Hz
Ähnlichste Farbtemperatur / Tone	3000 K
Farbwiedergabeindex	80 Ra
Gleichstrom/Gleichspannung	AC
Isolierklasse	2
IP	IP65
IK	IK06
Glühdrahtprüfung	850°
Direkte Montage auf normal entflammbaren Oberflächen	Nein
CE	Ja
Einschließlich Driver	Driver
Leuchte dimmbar	Nein
Schwenkbarkeit	Nein
Drehbarkeit	Nein
Begehbarkeit	Nein
Überrollbarkeit	Nein
Einschließlich Kabel	Nein
Harzbeschichtung	Nein
Typ Lichtabstrahlung	Zweiflammig
Nettogewicht	1.463 Kg
Schutz vor elektrostatischen Entladungen	Ja
Schutz vor Stoßspannungen	2 KV

Oberfläche Oberfläche Gehäuse	
Material	Stranggepresstes Aluminium EN AB - 46100
Farbe	Text white RAL9003
Bearbeitungstyp	Offenporige Anodisierung + Pulverlackierung

Oberfläche Oberfläche diffusor	
Material	UV beständiges Polycarbonat - Extra-helles Glas
Farbe	Black - transparent
Bearbeitungstyp	Siebdruck

Oberfläche Oberfläche bügel	
Material	Stahl AISI 304
Farbe	Stahl

Linea Light Group reserves the right, without any advance notice, to change the characteristics of their products, as well as the availability of the same at any time. No product, relative technical data, illustrations and information are binding for Linea Light Group. Linea Light Group will not be held liable for any illustration, text and/or translation\ errors. All values indicated are measured values. There is a +/- 10% tolerance for the flow, CCT and power data.

Wandleuchten | 198-264 V | 10 x powerLED 19.8 W DC - 22 W AC | CRI 80
76978W30

Double emission wall lights for outdoor application. The warm white LED light source with a double medium flood light distribution is composed of 10 powerled LEDs with CCT of 3000 K and a CRI 80; the source luminous flux is 2490 lm, with a 125.8 lm/W nominal luminous efficacy.

Product suitable for installations in coastal areas with high salinity and strong exposure to atmospheric agents.

The device body is made of die-cast aluminium en ab - 46100 and features a text white ral9003 finish, processed by means of open pore anodizing + powder coating; the diffuser is made of extra clear glass with a silk-screening treatment; the diffuser is made of uv resistant polycarbonate. Surface treatment of the product body through aluminum chemical conversion, followed by polyester powder coating, using exclusively coatings compliant with the Qualicoat standard.

The ingress protection degree is IP65; the total weight is of 1.463 kg.

The total absorbed power is 22 W

The device features protection class II and can be wall lights-mounted.

Compliant with the EN 60598-1 standard and its specific provisions.

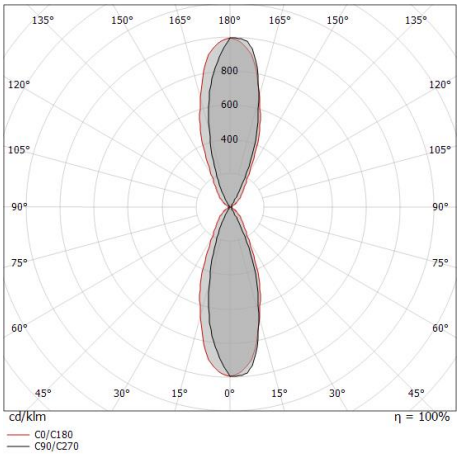

Energieeffizienzklasse
Dieses Produkt enthält 2 Lichtquellen der Energieeffizienzklasse D.

Illuminotechnical Eigenschaften	
Light Output Ratio (LOR)	72 %
Lichtstrom (Lichtquelle)	2490 lm
Leuchten Lichtstrom	1808 lm
Consumption	22 W
Leuchten Lichtausbeute	82 lm/W
Farbtemperatur	3000 K
Standard Deviation of Colour Matching	1.5 Step
Farbwiedergabeindex	80 Ra
Standardumgebungstemperatur	-20 / +50°C
Typische Temperatur am Glas	40°C

LED Life / Failure Ratio
L70 B10 C0 1240219h (at Tj 65 Ta 25)
L80 B10 C0 745627h (at Tj 65 Ta 25)
L90 B10 C0 309367h (at Tj 65 Ta 25)

OPTICAL	
Optik C0/C180	41°
Light distribution simmetry	Asymmetrical

Linea Light Group reserves the right, without any advance notice, to change the characteristics of their products, as well as the availability of the same at any time. No product, relative technical data, illustrations and information are binding for Linea Light Group. Linea Light Group will not be held liable for any illustration, text and/or translation\ errors. All values indicated are measured values. There is a +/- 10% tolerance for the flow, CCT and power data.