Rollip35_P Complete

Systeme - Pendelleuchte | 220-240 V
132 + 144 topLED 44 W DC - 46 W AC | CRI 80
65257N00



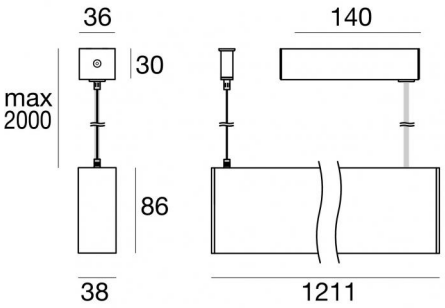

Technische Daten	
Typ	Systeme - Pendelleuchte - Oberfläche
Installationsposition	Decke
Installationsumgebung	Indoor
Lichtquelle	LED
Circuit structure	topLED
Optik	Diffuses + Diffuses
Light emission direction	downward + upward
Lampe Nennleistung	44 W DC
Gesamtleistung	46 W
Lichtstrom (Lichtquelle)	7577 lm
Nominale Eingangsspannung	220 - 240 V AC
Eingangsspannungsbereich	220 - 240 V AC
Frequency	50 - 60 Hz
Ähnlichste Farbtemperatur / Tone	4000 K
Farbwiedergabeindex	80 Ra
Gleichstrom/Gleichspannung	AC
Isolierklasse	1
IP	IP40
IP optisches System	IP54
Glühdrahtprüfung	850°
Direkte Montage auf normal entflammbaren Oberflächen	Ja
CE	Ja
Einschließlich Driver	Driver
Leuchte dimmbar	DALI-2 - PUSH DIM
Schwenkbarkeit	Nein
Drehbarkeit	Nein
Begehbarkeit	Nein
Überrollbarkeit	Nein
Einschließlich Kabel	Ja
Kabellänge	2 m
Harzbeschichtung	Nein
Typ Lichtabstrahlung	Zweiflammig
Nettogewicht	2.7 Kg
Schutz vor elektrostatischen Entladungen	Ja
Schutz vor Stoßspannungen	1 KV
Optiktechnologie	Dot free

Oberfläche Oberfläche Gehäuse	
Material	Aluminiumlegierung 6060
Farbe	Text white RAL9003
Bearbeitungstyp	Pulverbeschichtung mit duroplastischen Pulvern

Oberfläche Oberfläche diffusor	
Material	UV beständiges Polycarbonat
Farbe	Opal

Oberfläche Oberfläche sockel	
Material	Eisen
Farbe	Text white RAL9003
Bearbeitungstyp	Pulverbeschichtung mit duroplastischen Pulvern

Cables Pendelleuchte	
Max. Kabellänge	2000 mm

Cables Electrification+suspension	
Cable connector	No
Max. Kabellänge	2000 mm

Linea Light Group reserves the right, without any advance notice, to change the characteristics of their products, as well as the availability of the same at any time. No product, relative technical data, illustrations and information are binding for Linea Light Group. Linea Light Group will not be held liable for any illustration, text and/or translation\ errors. All values indicated are measured values. There is a +/- 10% tolerance for the flow, CCT and power data.

Systeme - Pendelleuchte | 220-240 V | 132 + 144 topLED 44 W DC - 46 W AC | CRI 80
65257N00

Double emission systems, pendant luminaires or pendant luminaires for indoor application. The natural white LED light source with a diffused light distribution is composed of 144 topled LEDs with CCT of 4000 K and a CRI 80; the source luminous flux is 3953 lm, with a 179.7 lm/W nominal luminous efficacy The natural white LED light source with a diffused light distribution is composed of 132 topled LEDs with CCT of 4000 K and a CRI 80; the source luminous flux is 3624 lm, with a 164.7 lm/W nominal luminous efficacy.

The device body is made of aluminium alloy 6060 and features a text white ral9003 finish, processed by means of powder coating with thermosetting powders; the diffuser is made of uv resistant polycarbonate.

The ingress protection degree is IP40; the total weight is of 2.7 kg.

The total absorbed power is 46 W The power supply cable is included and features a 2 m length.

The device features protection class I and can be ceiling-mounted.

Compliant with the EN 60598-1 standard and its specific provisions.

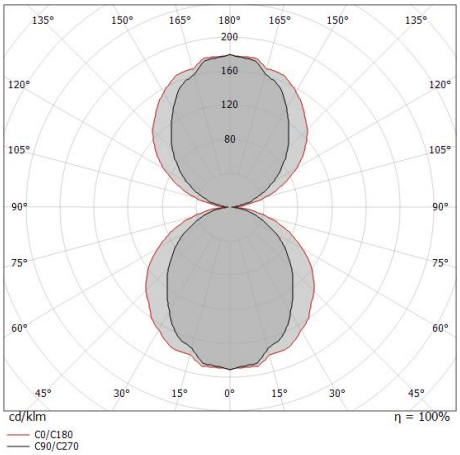

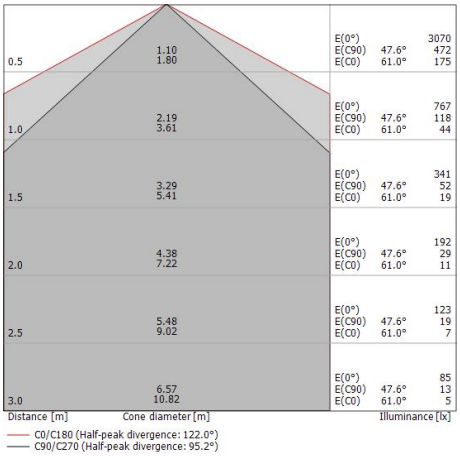

Energieeffizienzklasse
Dieses Produkt enthält 4.4 Lichtquellen der Energieeffizienzklasse D.

Illuminotechnical Eigenschaften	
Light Output Ratio (LOR)	52 %
Lichtstrom (Lichtquelle)	7577 lm
Leuchten Lichtstrom	4014 lm
Consumption	46 W
Leuchten Lichtausbeute	87 lm/W
Farbtemperatur	4000 K
Standard Deviation of Colour Matching	3 Step MacAdam
Farbwiedergabeindex	80 Ra
Standardumgebungstemperatur	-20 / +50°C
Typische Temperatur am Glas	40°C

LED Life / Failure Ratio
L70 B10 C0 494435h (at Tj 65 Ta 25)
L80 B10 C0 310287h (at Tj 65 Ta 25)
L90 B10 C0 147586h (at Tj 65 Ta 25)

UGR	
UGR axial	21
UGR transversal	23.9
X=4H | Y=8H	S=0.25H
Reflection factor	70/50/20

OPTICAL	
Optik C90/C270	95°
Optik C0/C180	122°
Light distribution simmetry	Symmetrical 2 assis

Linea Light Group reserves the right, without any advance notice, to change the characteristics of their products, as well as the availability of the same at any time. No product, relative technical data, illustrations and information are binding for Linea Light Group. Linea Light Group will not be held liable for any illustration, text and/or translation\ errors. All values indicated are measured values. There is a +/- 10% tolerance for the flow, CCT and power data.