Notbeleuchtung | 220-240 V
2 x powerLED 2 W DC 350 mA | CRI 80
62510.L





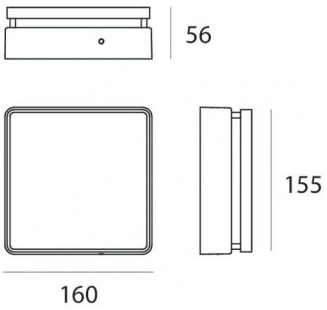

Technische Daten	
Typ	Oberfläche
Installationsposition	Wand
Installationsumgebung	Indoor
Lichtquelle	LED
Circuit structure	powerLED
Optik	Wide Flood
Light emission direction	frontal
Lampe Nennleistung	4 W DC
Gesamtleistung	4.5 W
Lichtstrom (Lichtquelle)	330 lm
Nominale Eingangsspannung	220 - 240 V AC
Eingangsspannungsbereich	220 - 240 V AC
Ähnlichste Farbtemperatur / Tone	6500 K
Farbwiedergabeindex	80 Ra
Gleichstrom/Gleichspannung	AC
Isolierklasse	1
IP	IP40
Glühdrahtprüfung	650°
Direkte Montage auf normal entflammbaren Oberflächen	Ja
CE	Ja
Einschließlich Driver	Driver
Leuchte dimmbar	Nein
Notbeleuchtung	Ja
Emergency mode time	3 ore
Percentage of brightness	80 %
UPS	Nein
Schwenkbarkeit	Nein
Drehbarkeit	Nein
Begehbarkeit	Nein
Überrollbarkeit	Nein
Einschließlich Kabel	Nein
Harzbeschichtung	Nein
Typ Lichtabstrahlung	Einflammig
Nettogewicht	1.2 Kg
Schutz vor elektrostatischen Entladungen	Ja
Schutz vor Stoßspannungen	Nein

Oberfläche Oberfläche Gehäuse	
Material	Stranggepresstes Aluminium EN AB - 46100
Farbe	Text white RAL9003
Bearbeitungstyp	Pulverbeschichtung mit duroplastischen Pulvern

Oberfläche Oberfläche diffusor	
Material	Polymethylmethacrylat UV-beständige
Farbe	Weiß - Grün
Bearbeitungstyp	Siebdruck

Linea Light Group reserves the right, without any advance notice, to change the characteristics of their products, as well as the availability of the same at any time. No product, relative technical data, illustrations and information are binding for Linea Light Group. Linea Light Group will not be held liable for any illustration, text and/or translation\ errors. All values indicated are measured values. There is a +/- 10% tolerance for the flow, CCT and power data.

Notbeleuchtung | 220-240 V | 2 x powerLED 2 W DC 350 mA | CRI 80
62510.L

Single emission emergency for indoor application. The cold white LED light source with a wide flood light distribution is composed of 2 powerled LEDs with CCT of 6500 K and a CRI 80; the source luminous flux is 330 lm, with a 82.5 lm/W nominal luminous efficacy.

The device body is made of die-cast aluminium en ab - 46100 and features a text white ral9003 finish, processed by means of powder coating with thermosetting powders; the diffuser is made of uv resistant polymethylmethacrylate with a silk-screening treatment.

The ingress protection degree is IP40; the total weight is of 1.2 kg.

The total absorbed power is 4.5 W

The device features protection class I and can be wall lights-mounted.

Compliant with the EN 60598-1 standard and its specific provisions.

Illuminotechnical Eigenschaften	
Lichtstrom (Lichtquelle)	330 lm
Farbtemperatur	6500 K
Standard Deviation of Colour Matching	1/16 ANSI BIN
Farbwiedergabeindex	80 Ra
Standardumgebungstemperatur	-20 / +50°C

LED Life / Failure Ratio
L70 B10 C0 716641h (at Tj 65 Ta 25)
L80 B10 C0 445035h (at Tj 65 Ta 25)
L90 B10 C0 205461h (at Tj 65 Ta 25)

Linea Light Group reserves the right, without any advance notice, to change the characteristics of their products, as well as the availability of the same at any time. No product, relative technical data, illustrations and information are binding for Linea Light Group. Linea Light Group will not be held liable for any illustration, text and/or translation\ errors. All values indicated are measured values. There is a +/- 10% tolerance for the flow, CCT and power data.