Rollip60_P Complete

Systeme - Pendelleuchte | 198-264 V
96 + 180 topLED 48 W DC - 55 W AC | CRI 92
60886W00

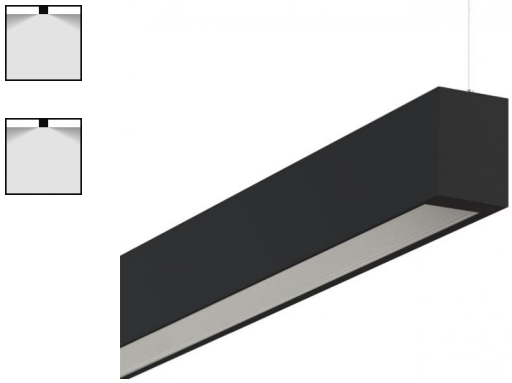

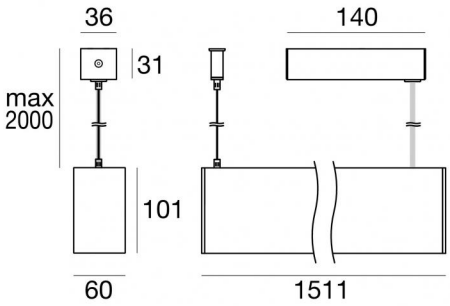

Technische Daten	
Typ	Systeme - Pendelleuchte - Oberfläche
Installationsposition	Decke
Installationsumgebung	Indoor
Lichtquelle	LED
Circuit structure	topLED
Optik	Diffuses + Diffuses
Light emission direction	downward + upward
Lampe Nennleistung	48 W DC
Gesamtleistung	55 W
Lichtstrom (Lichtquelle)	6692 lm
Nominale Eingangsspannung	220 - 240 V AC
Eingangsspannungsbereich	198 - 264 V AC
Ähnlichste Farbtemperatur / Tone	3000 K
Farbwiedergabeindex	92 Ra
Gleichstrom/Gleichspannung	AC
Isolierklasse	1
IP	IP40
IP optisches System	IP54
Glühdrahtprüfung	850°
Direkte Montage auf normal entflammbaren Oberflächen	Ja
CE	Ja
Einschließlich Driver	Driver
Leuchte dimmbar	Nein
Schwenkbarkeit	Nein
Drehbarkeit	Nein
Begehbarkeit	Nein
Überrollbarkeit	Nein
Einschließlich Kabel	Ja
Kabellänge	2 m
Harzbeschichtung	Nein
Typ Lichtabstrahlung	Zweiflammig
Nettogewicht	4.12 Kg
Schutz vor elektrostatischen Entladungen	Ja
Schutz vor Stoßspannungen	1 KV
Optiktechnologie	Dot free

Oberfläche Oberfläche Gehäuse	
Material	Aluminiumlegierung 6060
Farbe	Text black RAL9005
Bearbeitungstyp	Pulverbeschichtung mit duroplastischen Pulvern

Oberfläche Oberfläche diffusor	
Material	PC
Farbe	Opal - Transparent
Bearbeitungstyp	Satinieren

Oberfläche Oberfläche sockel	
Material	Eisen
Farbe	Text black RAL9005
Bearbeitungstyp	Pulverbeschichtung mit duroplastischen Pulvern

Cables Pendelleuchte	
Max. Kabellänge	2000 mm

Linea Light Group reserves the right, without any advance notice, to change the characteristics of their products, as well as the availability of the same at any time. No product, relative technical data, illustrations and information are binding for Linea Light Group. Linea Light Group will not be held liable for any illustration, text and/or translation\ errors. All values indicated are measured values. There is a +/- 10% tolerance for the flow, CCT and power data.

Systeme - Pendelleuchte | 198-264 V | 96 + 180 topLED 48 W DC - 55 W AC | CRI 92
60886W00

Double emission systems, pendant luminaires or pendant luminaires for indoor application. The warm white LED light source with a diffused light distribution is composed of 180 topled LEDs with CCT of 3000 K and a CRI 92; the source luminous flux is 4364 lm, with a 181.8 lm/W nominal luminous efficacy The warm white LED light source with a diffused light distribution is composed of 96 topled LEDs with CCT of 3000 K and a CRI 92; the source luminous flux is 2328 lm, with a 97.0 lm/W nominal luminous efficacy.

The device body is made of aluminium alloy 6060 and features a text black ral9005 finish, processed by means of powder coating with thermosetting powders; the diffuser is made of PC; the diffuser is made with a satin finishing treatment.

The ingress protection degree is IP40; the total weight is of 4.12 kg.

The total absorbed power is 55 W The power supply cable is included and features a 2 m length.

The device features protection class I and can be ceiling-mounted.

Compliant with the EN 60598-1 standard and its specific provisions.

Energieeffizienzklasse
Dieses Produkt enthält 7 Lichtquellen der Energieeffizienzklasse E, E.

Illuminotechnical Eigenschaften	
Light Output Ratio (LOR)	58 %
Lichtstrom (Lichtquelle)	6692 lm
Leuchten Lichtstrom	3930 lm
Consumption	55 W
Leuchten Lichtausbeute	71 lm/W
Farbtemperatur	3000 K
Standard Deviation of Colour Matching	3 Step MacAdam
Farbwiedergabeindex	92 Ra
Standardumgebungstemperatur	-20 / +50°C
Typische Temperatur am Glas	40°C

LED Life / Failure Ratio
L70 B10 C0 494435h (at Tj 65 Ta 25)
L80 B10 C0 310287h (at Tj 65 Ta 25)
L90 B10 C0 147586h (at Tj 65 Ta 25)

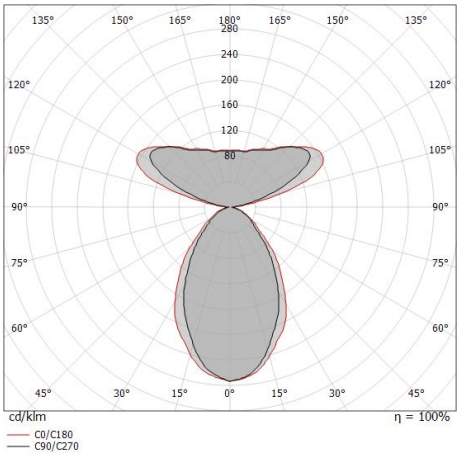

Linea Light Group reserves the right, without any advance notice, to change the characteristics of their products, as well as the availability of the same at any time. No product, relative technical data, illustrations and information are binding for Linea Light Group. Linea Light Group will not be held liable for any illustration, text and/or translation\ errors. All values indicated are measured values. There is a +/- 10% tolerance for the flow, CCT and power data.