DS-2CD1H23G0E-IZ
2 MP Motorized Varifocal Turret Network Camera

- High quality imaging with 2 MP resolution
- Efficient H.265+ compression technology
- Clear imaging even with strong back lighting due to DWDR technology
- Up to 256 GB SD card slot for storage
- 2.8 to 12 mm motorized varifocal lens for easy installation and monitoring
- Water and dust resistant (IP67)
- EXIR 2.0: advanced infrared technology with long IR range

▪ Specification

Camera	
Image Sensor	1/2.7" Progressive Scan CMOS
Max. Resolution	1920 × 1080
Min. Illumination	Color: 0.005 Lux @(F1.6, AGC ON), B/W: 0 Lux with IR
Shutter Speed	1/3 s to 1/100,000 s
Wide Dynamic Range	Digital WDR
Day & Night	IR Cut Filter
Angle Adjustment	Pan: 0° to 360°, tilt: 0° to 75°, rotation: 0° to 360°
Lens	
Lens Type	Varifocal Lens, motorized lens, 2.8 to 12 mm
Focal Length & FOV	2.8 to 12 mm: horizontal FOV 112° to 33°, vertical FOV 58° to 19°, diagonal FOV 134° to 39°
Lens Mount	Ø14
Iris Type	Fixed
Aperture	F1.6
Illuminator	
IR Wavelength	850 nm
IR Range	Up to 30 m
Video	
Main Stream	50 Hz: 25 fps (1920 × 1080, 1280 × 720), 60 Hz: 30 fps (1920 × 1080, 1280 × 720)
Sub-Stream	50 Hz: 25 fps (640 × 480, 640 × 360) 60 Hz: 30 fps (640 × 480, 640 × 360)
Video Compression	Main stream: H.265+/H.265/H.264+/H.264 Sub-stream: H.265/H.264/MJPEG
Video Bit Rate	32 Kbps to 8 Mbps
H.264 Type	Baseline Profile/Main Profile/High Profile
H.265 Type	Main Profile
Region of Interest (ROI)	1 fixed region for main stream
Audio	
Audio Compression	-S: G.711ulaw/G.711alaw/G.722.1/G.726/MP2L2/PCM/AAC
Audio Bit Rate	-S: 64 Kbps (G.711)/16 Kbps (G.722.1)/16 Kbps (G.726)/32 to 160 Kbps (MP2L2)/16 to 64 Kbps (AAC)
Audio Sampling Rate	-S: 8 kHz/16 kHz
Environment Noise Filtering	-S: Yes
Network	
Protocols	TCP/IP, ICMP, HTTP, HTTPS, FTP, DHCP, DNS, DDNS, RTP, RTSP, RTCP, NTP, UPnP™, SMTP, IGMP, 802.1X, QoS, IPv6, Bonjour, IPv4, UDP, SSL/TLS
Simultaneous Live View	Up to 6 channels
API	Open Network Video Interface, ISAPI
User/Host	Up to 32 users. 3 levels: administrator, operator and user
Client	iVMS-4200, Hik-Connect

Web Browser	Plug-in required live view: IE 10+ Plug-in free live view: Chrome 57.0+, Firefox 52.0+ Local service: Chrome 57.0+, Firefox 52.0+
Image	
Image Settings	Saturation, brightness, contrast, sharpness, AGC, white balance adjustable by client software or web browser
Day/Night Switch	Auto, Schedule, Day, Night
Image Enhancement	BLC, 3D DNR
Interface	
Ethernet Interface	1 RJ45 10 M/100 M self-adaptive Ethernet port
On-Board Storage	Built-in memory card slot, support microSD card, up to 256 GB
Audio	-S: 1 input (line in), 1 output (line out), mono sound
Alarm	-S: 1 input,1 output (max. 12 VDC, 30 mA)
Reset Key	Yes
Event	
Basic Event	Motion detection, video tampering alarm, exception
Linkage	-S: Upload to FTP, notify surveillance center, send email, upload to memory card, trigger recording, trigger capture, trigger alarm output
General	
Power	12 VDC ± 25%, 0.75 A, max. 9 W, Ø5.5 mm coaxial power plug PoE: (802.3af, Class 3, 36 V to 57 V), 0.17 A to 0.27 A, max. 10 W
Material	Cover: plastic, main body: metal
Camera Dimension	Ø129.4 mm × 116.4 mm (5.1" × 4.6")
Package Dimension	170 mm × 170 mm × 150 mm (6.7" × 6.7" × 5.9")
Camera Weight	Approx. 560 g (1.2 lb.)
With Package Weight	Approx. 850 g (1.9 lb.)
Storage Conditions	-30 °C to +60 °C (-22 °F to +140 °F). Humidity 95% or less (non-condensing)
Startup and Operating Conditions	-30 °C to +60 °C (-22 °F to +140 °F). Humidity 95% or less (non-condensing)
Language	English, Ukrainian
General Function	Anti-flicker, heartbeat, mirror, password protection, privacy mask, watermark, IP address filter
Approval	
EMC	FCC SDoC (47 CFR Part 15, Subpart B); CE-EMC (EN 55032: 2015, EN 61000-3-2: 2014, EN 61000-3-3: 2013, EN 50130-4: 2011 +A1: 2014); RCM (AS/NZS CISPR 32: 2015); IC VoC (ICES-003: Issue 6, 2016); KC (KN 32: 2015, KN 35: 2015)
Safety	UL (UL 60950-1); CB (IEC 60950-1:2005 + Am 1:2009 + Am 2:2013, IEC 62368-1:2014); CE-LVD (EN 60950-1:2005 + Am 1:2009 + Am 2:2013, IEC 62368-1:2014); BIS (IS 13252(Part 1):2010+A1:2013+A2:2015)

Environment	CE-RoHS (2011/65/EU); WEEE (2012/19/EU); Reach (Regulation (EC) No 1907/2006)
Other	IP67 (IEC 60529-2013)

▪ Available Model

DS-2CD1H23G0E-IZ (2.8 to 12 mm)

Typical Application

Hikvision products are classified into three levels according to their anti-corrosion performance. Refer to the following description to choose for your using environment.

This model has NO SPECIFIC PROTECTION.

Level	Description
Top-level protection	Hikvision products at this level are equipped for use in areas where professional anti-corrosion protection is a must. Typical application scenarios include coastlines, docks, chemical plants, and more.
Moderate protection	Hikvision products at this level are equipped for use in areas with moderate anti-corrosion demands. Typical application scenarios include coastal areas about 2 kilometers (1.24 miles) away from coastlines, as well as areas affected by acid rain.
No specific protection	Hikvision products at this level are equipped for use in areas where no specific anti-corrosion protection is needed.

▪ Dimension

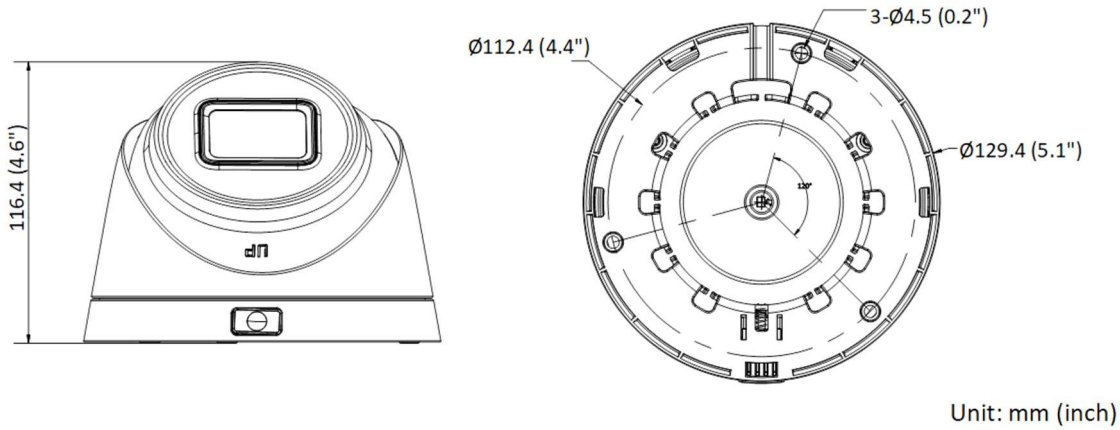

▪ Accessory

▪ Optional

DS-1276ZJ-SUS Corner Mount	DS-1275ZJ-SUS Vertical Pole Mount	DS-1271ZJ-130-TRL Pendant Mount	DS-1273ZJ-130B-TRL Wall Mount	DS-1281ZJ-M Inclined Ceiling Mount

DS-1280ZJ-M Junction Box	DS-1273ZJ-130-TRL Wall Mount

Distributed by

Headquarters
No.555 Qianmo Road, Binjiang District,
Hangzhou 310051, China
T +86-571-8807-5998
overseasbusiness@hikvision.com

Hikvision USA
T +1-909-895-0400
sales.usa@hikvision.com

Hikvision Europe
T +31-23-5542770
sales.eu@hikvision.com

Hikvision UK & Ireland
T +01628-902140
sales.uk@hikvision.com

Hikvision UAE
T +971-4-4432090
salesme@hikvision.com

Hikvision Russia
T +7-495-669-67-99
saleru@hikvision.com

Hikvision Australia
T +61-2-8599-4233
salesau@hikvision.com

Hikvision Italy
T +39-0438-6902
info.it@hikvision.com

Hikvision South Africa
Tel: +27 (10) 0351172
sale.africa@hikvision.com

Hikvision Singapore
T +65-6684-4718
sg@hikvision.com

Hikvision Korea
T +82-(0)31-731-8817
sales.korea@hikvision.com

Hikvision India
T +91-22-28469900
sales@pramahikvision.com

Hikvision Brazil
T +55 11 3318-0050
Latam.support@hikvision.com

Hikvision France
T +33(0)1-85-330-450
info.fr@hikvision.com

Hikvision Spain
T +34-91-737-16-55
info.es@hikvision.com

Hikvision Poland
T +48-22-460-01-50
info.pl@hikvision.com

Hikvision Canada
T +1-866-200-6690
sales.canada@hikvision.com

Hikvision Turkey
T +90 (216)521 7070- 7074
sales.tr@hikvision.com

Hikvision Kazakhstan
T +7-727-9730667
nikia.panfilov@hikvision.ru

Hikvision Tashkent
T +99-87-1238-9438
uzb@hikvision.ru

Hikvision Indonesia
T +62-21-2933759
Sales.Indonesia@hikvision.com

Hikvision Thailand
T +662-275-9949
sales.thailand@hikvision.com

Hikvision Malaysia
T +601-7652-2413
sales.my@hikvision.com

Hikvision Vietnam
T +84-974270888
sales.vt@hikvision.com

Hikvision Hong Kong
T +852-2151-1761
info.hk@hikvision.com

Hikvision Colombia
sales.colombia@hikvision.com

© Hikvision Digital Technology Co., Ltd. 2020 | Data subject to change without notice |