DS-1280ZJ-S(Black)

Junction Box

Features

- Aluminum alloy with surface spray treatment
- Side outlet, and bottom outlet
- Interchangeable bottom waterproof cover, and side gland nut
- Applies to both indoor conditions, and outdoor conditions

Dimension

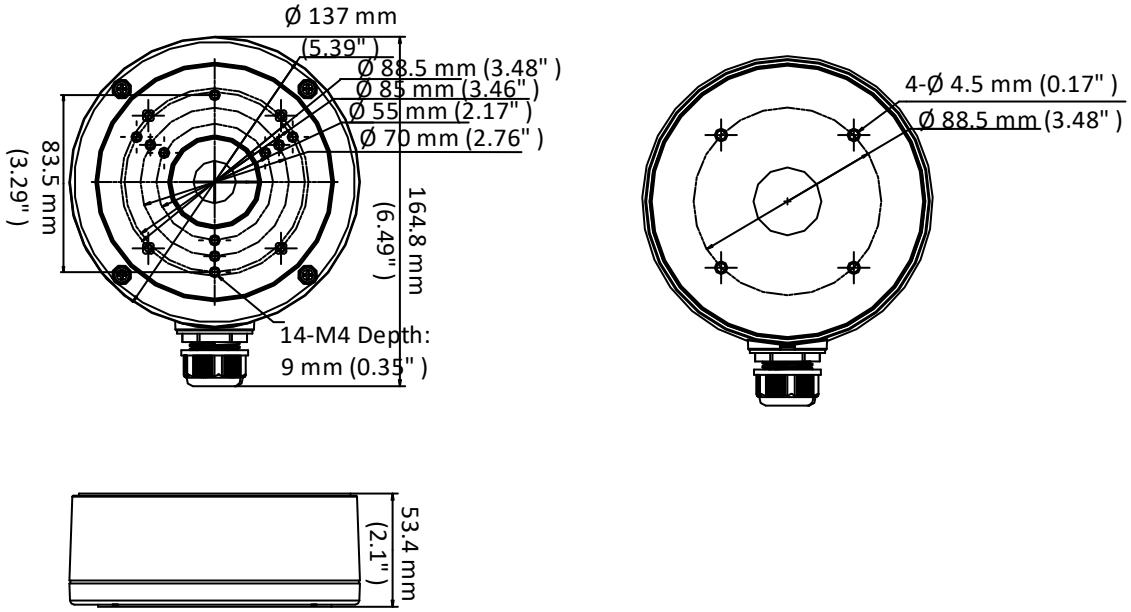

Available Model

DS-1280ZJ-S(Black)

Parameter

Model / Parameters	DS-1280ZJ-S(Black)
	Junction Box
Appearance	Black
Material	Aluminum Alloy
Dimension	Ø 137 mm × 164.8 mm × 53.4 mm (Ø 5.39" × 6.49" × 2.1")
Weight	621 g (1.37 lb.)

Notes

- The junction box should be installed on the flat surface.
- Waterproof rubber is necessary for outdoor application.
- The wall must be capable of supporting at least 3 times as much as the total weight of the camera, and the mount.
- The maximum load capacity of the junction box is 4.5 kg (9.9 lb.).