DICHIARAZIONE DI PRESTAZIONE

DoP 0189

per il Sistema a Iniezione fischer FIS V (ancorante chimico per l'utilizzo in muratura) IT

1. Codice di identificazione unico del prodotto-tipo: **DoP 0189**

2. Usi previsti: **Fissaggio post-installato negli elementi in muratura.**
   Vedi appendice, in particolare gli allegati da B1- B15

3. Fabbricante: **fischerwerke GmbH & Co. KG, Otto-Hahn-Straße 15, 79211 Denzlingen, Germany**

4. Mandatario: **–**

5. Sistemi di VVCP: **1**

6. Documento per la valutazione europea: **EAD 330076-00-0604, Edition 11/ 2017**
   Valutazione tecnica europea: **ETA-10/0383; 2020-07-07**
   Organismo di valutazione tecnica: **DIBt- Deutsches Institut für Bautechnik**
   Organismi notificati: **1343 MPA Darmstadt / 2873 TU Darmstadt**

7. Prestazioni dichiarate:

Resistenza meccanica e stabilità (BWR 1)

Valore caratteristico per la resistenza:

Fattore di riduzione:
Allegati C110

Resistenza caratteristica di un ancorante singolo sotto carico di trazione:
Allegati B3, C1, C3, C5, C7, C9, C11, C13, C15, C17, C19, C21, C23, C25, C27, C29, C31, C33, C35, C37, C39, C41, C43, C45, C47, C49, C51, C53, C55, C57, C59, C61, C63, C65, C67, C69, C71, C73, C75, C77, C79, C81, C83, C85, C87, C89, C91, C93, C95, C97, C99, C101, C102, C105, C107, C109

Resistenza caratteristica di un gruppo di ancoranti sotto carico di trazione:
Allegati B15

Resistenza caratteristica di un ancorante singolo sotto carico di taglio:
Allegati B3, C2, C3, C5, C7, C9, C11, C13, C15, C17, C19, C21, C23, C25, C27, C29, C31, C33, C35, C37, C39, C41, C43, C45, C47, C49, C51, C53, C55, C57, C59, C61, C63, C65, C67, C69, C71, C73, C75, C77, C79, C81, C83, C85, C87, C89, C91, C93, C95, C97, C99, C101, C102, C105, C107, C109

Resistenza caratteristica di un gruppo di ancoranti sotto carico di taglio senza e con influenza del bordo:
Allegati B15

Distanza dal bordo e interasse caratteristici:
Allegati B15, C4, C6, C8, C10, C12, C14, C16, C18, C20, C22, C24, C26, C28, C30, C32, C34, C36, C38, C40, C42, C44, C46, C48, C50, C52, C54, C56, C58, C60, C62, C64, C66, C68, C70, C72, C74, C76, C78, C80, C82, C84, C86, C88, C90, C92, C94, C96, C98, C100, C102, C104, C106, C108

Distanza dal bordo e interasse minimi:
Allegati B15, C4, C6, C8, C10, C12, C14, C16, C18, C20, C22, C24, C26, C28, C30, C32, C34, C36, C38, C40, C42, C44, C46, C48, C50, C52, C54, C56, C58, C60, C62, C64, C66, C68, C70, C72, C74, C76, C78, C80, C82, C84, C86, C88, C90, C92, C94, C96, C98, C100, C102, C104, C106, C108

Fattore di gruppo sotto carico di trazione e di taglio:
Allegati C4, C6, C8, C10, C12, C14, C16, C18, C20, C22, C24, C26, C28, C30, C32, C34, C36, C38, C40, C42, C44, C46, C48, C50, C52, C54, C56, C58, C60, C62, C64, C66, C68, C70, C72, C74, C76, C78, C80, C82, C84, C86, C88, C90, C92, C94, C96, C98, C100, C102, C104, C106, C108

Spessore minimo dell'elemento:
Allegati B2

Durabilità: Allegati A5, B2

Spostamenti : Allegati C110

Sicurezza in caso di incendio (BWR 2)

Reazione al fuoco: Classe (A1)

Igiene, salute e ambiente (BWR 3)

Contenuto, emissione e/o rilascio di sostanze pericolose: NPA

8. Documentazione tecnica appropriata e/o documentazione tecnica specifica: –

La prestazione del prodotto sopra identificato è conforme all'insieme delle prestazioni dichiarate. La presente dichiarazione di prestazione è emessa, in conformità al regolamento (UE) n. 305/2011, sotto la sola responsabilità del fabbricante sopra identificato.

Firmato a nome e per conto del fabbricante da:



Thilo Pregartner, Dr.-Ing.



Peter Schillinger, Dipl.-Ing.

Tumlingen, 2019-07-21

Questa Dichiarazione di Prestazione (DoP) è stata preparata in varie lingue. In caso di contestazioni sull'interpretazione, prevarrà sempre la versione inglese.

L'Appendice include informazioni volontarie e complementari in lingua inglese che superano i requisiti di legge (lingua specificata in modo neutrale).

Specific Part

1 Technical description of the product

The fischer injection system FIS V for masonry is a bonded anchor (injection type) consisting of a mortar cartridge with injection mortar fischer FIS V, FIS VS and FIS VW, a perforated sieve sleeve and an anchor rod with hexagon nut and washer or an internal threaded rod in the range of M6 to M16. The steel elements are made of zinc coated steel, stainless steel or high corrosion resistant steel.

The anchor rod is placed into a drilled hole filled with injection mortar and is anchored via the bond between steel element, injection mortar and masonry and mechanical interlock.

The product description is given in Annex A.

2 Specification of the intended use in accordance with the applicable European Assessment Document

The performances given in Section 3 are only valid if the anchor is used in compliance with the specifications and conditions given in Annex B.

The verifications and assessment methods on which this European Technical Assessment is based lead to the assumption of a working life of the anchor of at least 50 years. The indications given on the working life cannot be interpreted as a guarantee given by the producer, but are to be regarded only as a means for choosing the right products in relation to the expected economically reasonable working life of the works.

3 Performance of the product and references to the methods used for its assessment

3.1 Mechanical resistance and stability (BWR 1)

Essential characteristic	Performance
Characteristic values for resistance	See Annexes C 1 to C 109
Displacements	See Annex C 110
Durability	See annex B 2

3.2 Safety in case of fire (BWR 2)

Essential characteristic	Performance
Reaction to fire	Class A1

3.3 Hygiene, health and the environment (BWR 3)

Essential characteristic	Performance
Content, emission and/or release of dangerous substances	No performance assessed

4 Assessment and verification of constancy of performance (AVCP) system applied, with reference to its legal base

In accordance with the European Assessment Document EAD 330076-00-0604 the applicable European legal act is: [97/177/EC].

The system to be applied is: 1

Installation conditions part 1

Anchor rods with perforated sleeve FIS H K; Installation in perforated and solid brick masonry

Pre-positioned anchorage:

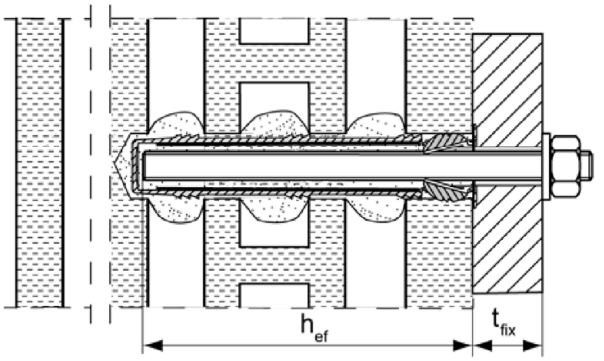

Installation with render bridge

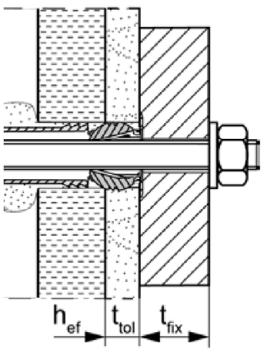

Size of the perforated sleeve: FIS H 12x50 K, FIS H 12x85 K, FIS H 16x85 K, FIS H 16x130 K, FIS H 20x85 K, FIS H 20x130 K, FIS H 20x200 K

Push through anchorage:

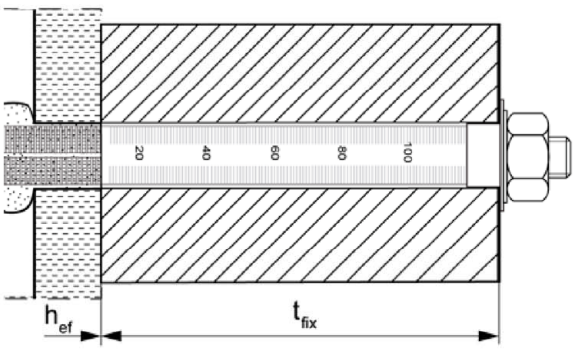

Installation with render bridge

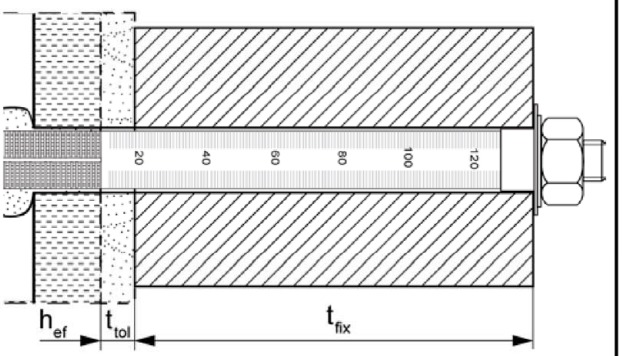

Size of the perforated sleeve: FIS H 18x130/200 K, FIS H 22x130/200 K

Internal threaded anchor FIS E with perforated sleeve FIS H K; Installation in perforated and solid brick masonry

Pre-positioned anchorage:

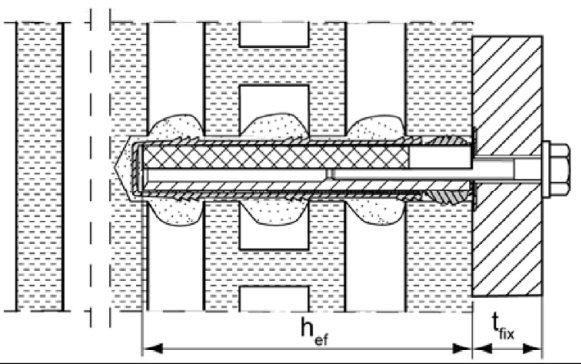

Installation with render bridge

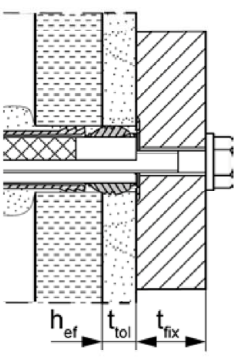

Pictures not to scale

h_{ef} = effective anchorage depth

t_{tol} = thickness of unbearing layer (e.g. plaster)

t_{fix} = thickness of fixture

fischer injection system FIS V for masonry

Product description
Installation conditions part 1,
Anchor rods and internal threaded anchor with perforated sleeve

Annex A 1

Appendix 2/ 131

Installation conditions part 2

Anchor rods without perforated sleeve FIS H K;
installation in solid brick masonry and autoclaved aerated concrete

Pre-positioned anchorage:

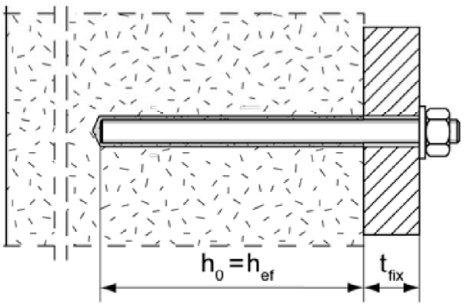

Push through anchorage: Annular gap filled with mortar

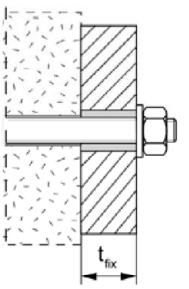

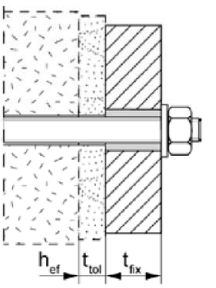

Installation with render bridge

Internal threaded anchors FIS E without perforated sleeve FIS H K;
installation in solid brick masonry and autoclaved aerated concrete

Pre-positioned anchorage:

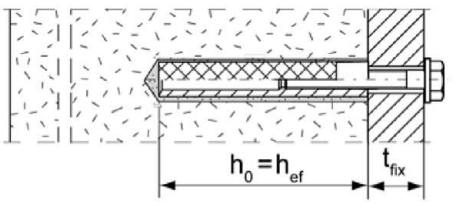

Installation with render bridge

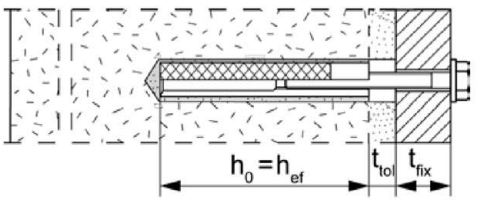

Anchor rods and internal threaded anchors FIS E without perforated sleeve FIS H K; installation with centring sleeve in autoclaved aerated concrete with conical drill hole
(installation with special conic drill bit PBB)

Pre-positioned anchorage:
anchor rods M8, M10, M12

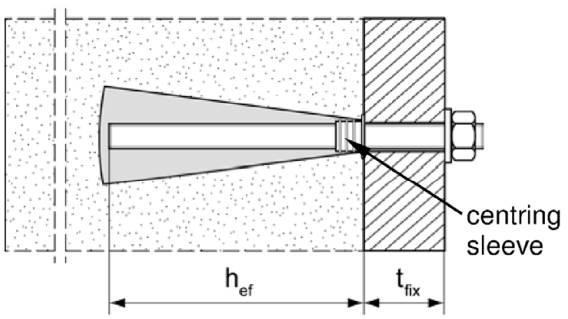

Pre-positioned anchorage:
Internal threaded anchor FIS E 11x85 M6 / M8

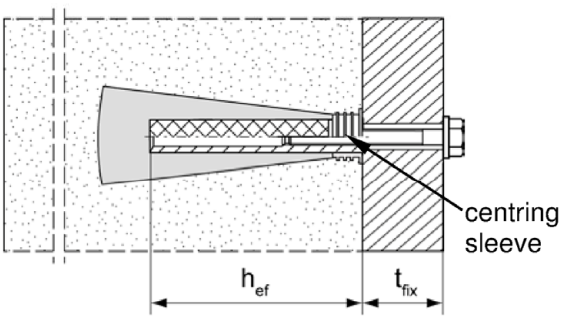

Pictures not to scale

h_0 = depth of drill hole
h_{ef} = effective anchorage depth
t_{tol} = thickness of unbearing layer (e.g. plaster)
t_{fix} = thickness of fixture

fischer injection system FIS V for masonry

Product description
Installation conditions part 2, Anchor rods and internal threaded anchor without perforated sleeve / with centring sleeve

Annex A 2

Appendix 3/ 131

Overview system components part 1

Mortar cartridge (shuttle cartridge) with sealing cap

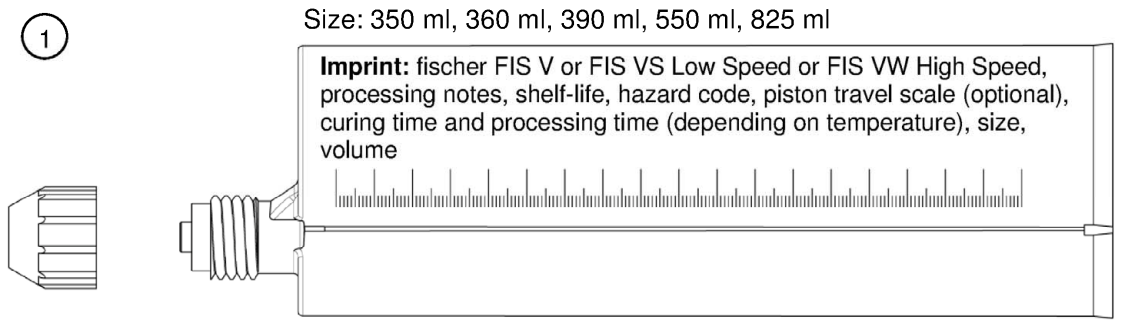

Mortar cartridge (coaxial cartridge) with sealing cap

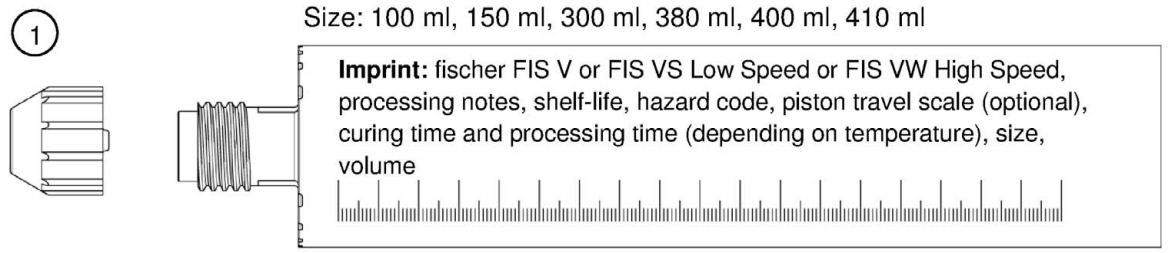

Static mixer MR Plus with injection adapter and center sleeve for aerated concrete

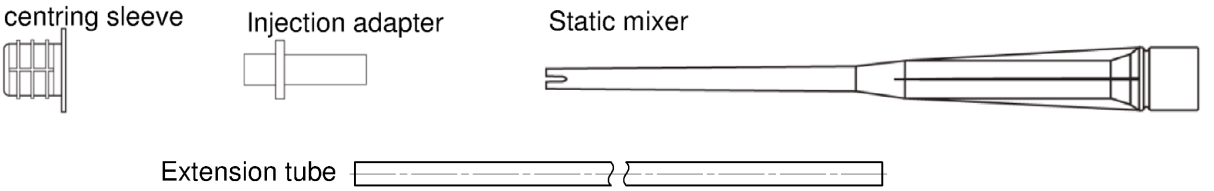

Cleaning brush BS

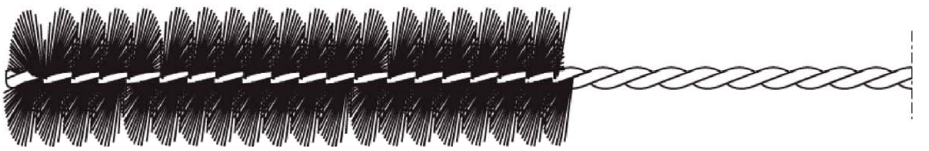

Blow-out pump ABG or ABP

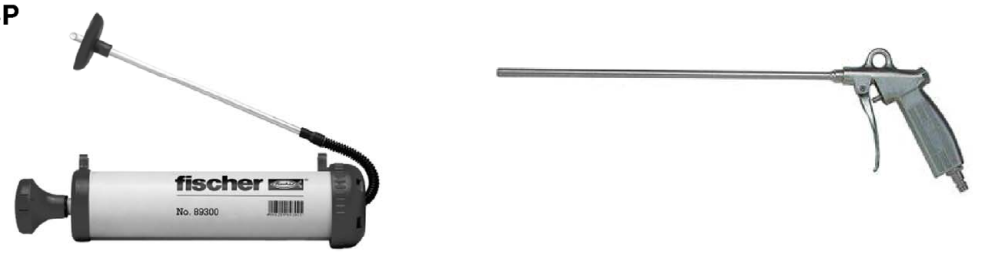

Pictures not to scale

Overview system components part 2

fischer anchor rod

(2) 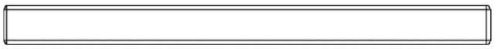

Size: M6, M8, M10, M12, M16

Internal threaded anchor FIS E

(5) 

Size: 11x85 M6 / M8
15x85 M10 / M12

Perforated sleeve FIS H K

(7) 

Size: FIS H 12x50 K
FIS H 12x85 K
FIS H 16x85 K
FIS H 20x85 K

(7) 

Size: FIS H 16x130 K
FIS H 20x130 K
FIS H 20x200 K

Perforated sleeve FIS H K (push through anchorage)

(7) 

Size:
FIS H 18x130/200 K
FIS H 22x130/200 K

Washer

(3) 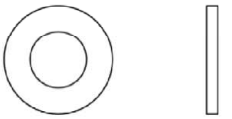

Hexagon nut

(4) 

Pictures not to scale

fischer injection system FIS V for masonry

Product description
Overview system components part 2: steel parts / perforated sleeve

Annex A 4

Appendix 5/ 131

Table A5.1: Materials

Part	Designation	Material		
1	Mortar cartridge	Mortar, hardener; filler		
		Steel	Stainless steel R	High corrosion-resistant steel HCR
		zinc plated	acc. to EN 10088-1:2014 Corrosion resistance class CRC III acc. to EN 1993-1-4:2015	acc. to EN 10088-1:2014 Corrosion resistance class CRC V acc. to EN 1993-1-4:2015
2	Anchor rod	Property class 4.6; 4.8; 5.8 oder 8.8; EN ISO 898-1: 2013 zinc plated ≥ 5µm, ISO 4042:2018 Zn5/An(A2K) or hot-dip galvanised EN ISO 10684:2004 $f_{uk} \leq 1000$ N/mm² $A_5 > 8\%$ fracture elongation	Property class 50, 70 or 80 EN ISO 3506-1:2009 1.4401; 1.4404; 1.4578; 1.4571; 1.4439; 1.4362; 1.4062; 1.4662; 1.4462; EN 10088-1:2014 $f_{uk} \leq 1000$ N/mm² $A_5 > 8\%$ fracture elongation	Property class 50 or 80 EN ISO 3506-1:2009 or property class 70 with f_{yk}= 560 N/mm² 1.4565; 1.4529 EN 10088-1:2014 $f_{uk} \leq 1000$ N/mm² $A_5 > 8\%$ fracture elongation
3	Washer ISO 7089:2000	zinc plated ≥ 5µm, ISO 4042:2018 Zn5/An(A2K) or hot-dip galvanised EN ISO 10684:2004	1.4401; 1.4404; 1.4578; 1.4571; 1.4439; 1.4362; EN 10088-1:2014	1.4565;1.4529 EN 10088-1:2014
4	Hexagon nut	Property class 5 or 8; EN ISO 898-2:2012 zinc plated ≥ 5µm, ISO 4042:2018 Zn5/An(A2K) or hot-dip galvanised ISO 10684:2004	Property class 50, 70 or 80 EN ISO 3506-1:2009 1.4401; 1.4404; 1.4578; 1.4571; 1.4439; 1.4362; EN 10088-1:2014	Property class 50, 70 or 80 EN ISO 3506-1:2009 1.4565; 1.4529 EN 10088-1:2014
5	Internal threaded anchor FIS E	Property class 5.8; EN 10277-1:2008-06 zinc plated ≥ 5µm, ISO 4042:2018 Zn5/An(A2K)	Property class 70 EN ISO 3506-1:2009 1.4401; 1.4404; 1.4578; 1.4571; 1.4439; 1.4362; EN 10088-1:2014	Property class 70 EN ISO 3506-1:2009 1.4565; 1.4529 EN 10088-1:2014
6	Commercial standard screw or threaded rod for internal threaded anchor FIS E	Property class 5.8 or 8.8; EN ISO 898-1:2013 zinc plated ≥ 5µm, ISO 4042:2018 Zn5/An(A2K)	Property class 70 EN ISO 3506-1:2009 1.4401; 1.4404; 1.4578; 1.4571; 1.4439; 1.4362; EN 10088-1:2014	Property class 70 EN ISO 3506-1:2009 1.4565; 1.4529 EN 10088-1:2014
7	Perforated sleeve and centring sleeve	PP / PE		

Specifications of intended use (part 1)

Table B1.1: Overview use and performance categories

Anchorages subject to		**fischer injection system FIS V for masonry**	
Hole drilling with hammer drill mode		all bricks; without C28 to C48, C75 to C78	
Hole drilling with rotary drill mode		all bricks	
Static and quasi static load, in masonry		all bricks	
Use category	dry or wet masonry	all bricks	
Installation	Pre-positioned anchorage	Anchor rod or internal threaded anchor (in solid brick masonry and autoclaved aerated concrete)	Perforated sleeve with anchor rod or internal threaded anchor (in perforated and solid brick masonry) Size: FIS H 12x50 K FIS H 12x85 K FIS H 16x85 K FIS H 16x130 K FIS H 20x85 K FIS H 20x130 K FIS H 20x200 K
	Push through anchorage	Anchor rod; use only in cylindrical drill hole (in solid brick masonry and autoclaved aerated concrete)	Perforated sleeve with anchor rod (in perforated and solid brick masonry) Size: FIS H 18x130/200 K FIS H 22x130/200 K
Installation conditions	category d/d	all bricks	
	category w/d		
	category w/w		
Installation direction		D3 (downward and horizontal and upwards (e.g. overhead) installation)	
Installation temperature		$T_{i,min}$ = 0 °C bis $T_{i,max}$ = +40 °C	
In-service temperature	Temperature range Tb	-40 °C to +80 °C	(max. short term temperature +80 °C max. long term temperature +50 °C)
	Temperature range Tc	-40 °C to +120 °C	(max. short term temperature +120 °C; max. long term temperature +72 °C)

Specifications of intended use (part 2)

Anchorages subject to:

- Static and quasi-static loads

Base materials:

- Solid brick masonry (Use category b) and autoclaved aerated concrete (Use category d), acc. to Annex B 13 / B 14
- Hollow brick masonry (use category c), according to Annex B 13 / B 14
- For minimum thickness of masonry member is h_{ef}+30mm
- Mortar strength class of the masonry M2,5 at minimum according to EN 998-2:2010
- For other bricks in solid masonry, hollow or perforated masonry and autoclaved aerated concrete, the characteristic resistance of the anchor may be determined by job site tests according to EOTA Technical Report TR 053, Annex B under consideration of the β-factor according to Annex C 110, Table C110.1

  Note (only applies to solid bricks and autoclaved aerated concrete):
  The characteristic resistance is also valid for larger brick sizes, higher compressive strength and higher raw density of the masonry unit.

Temperature Range:

- **Tb:** From - 40°C to +80°C (max. short term temperature +80°C and max. long term temperature +50°C)
- **Tc:** From -40°C to +120°C (max. short term temperature +120°C and max. long term temperature +72°C)

Use conditions (Environmental conditions):

- **X1:** Structures subject to dry internal conditions exist
  (zinc coated steel, stainless steel or high corrosion resistant steel)
- **X2:** Structures subject to external atmospheric exposure including industrial and marine environment or exposure to permanently damp internal condition, if no particulary aggressive conditions exist
  (stainless steel or high corrosion resistant steel)
- **X3:** Structures subject to external atmospheric exposure and to permanently damp internal condition, if other particulary aggressive conditions exist (high corrosion resistant steel)

  Note: Particulary aggressive conditions are e.g. permanent, alternating immersion in seawater or the splash zone of seawater, chloride atmosphere of indoor swimming pools or atmosphere with extreme chemical pollution (e.g. in desulphurization plants or road tunnels where de-icing materials are used)

Specifications of intended use (part 2 continued)

Design:

- The anchorages have to be designed in accordance with EOTA Technical Report TR 054, Design method A under the responsibility of an engineer experienced in anchorages and masonry work.
  Applies to all bricks, if no other values are specified:
  $N_{Rk} = N_{Rk,b} = N_{Rk,p}$
  $V_{Rk} = V_{Rk,b} = V_{Rk,c}$
  For the Calculation of pulling out a brick under tensile load $\mathbf{N_{Rk,pb}}$ or
  pushing out a brick under shear load $\mathbf{V_{Rk,pb}}$ see EOTA Technical Report TR 054.
  $\mathbf{N_{Rk,s}}$, $\mathbf{V_{Rk,s}}$ and $\mathbf{M^0_{Rk,s}}$ see annex C1-C3
  Factors for job site tests and displacements see Annex C110
- Verifiable calculation notes and drawings have to be prepared taking account the relevant masonry in the region of the anchorage, the loads to be transmitted and their transmission to the supports of the structure. The position of the anchor is indicated on the design drawings.

Installation:

- Category d/d: - Installation and use in dry structures
- Category w/w: - Installation and use in dry and wet structures
- Category w/d: - Installation in wet structures and use in dry structures
- Hole drilling see Annex C (drilling method)
- In case of aborted hole: The hole shall be filled with mortar
- Bridging of unbearing layer (e.g. plaster) at perforated brick masonry see Annex B 6, Table B6.1
- Anchor installation carried out by appropriately qualified personnel and under the supervision of the person responsible for technical matters of the site
- Fastening screws or anchor rods (including nut and washer) must comply with the appropriate material and property class of the fischer internal threaded anchor FIS E.
- minimum curing time see Annex B 8, Table B8.2
- Commercial standard threaded rods, washers and hexagon nuts may also be used if the following requirements are fulfilled:
  Material dimensions and mechanical properties of the metal parts according to the specifications are given in Annex A 5, Table 5.1
  Conformation of material and mechanical properties of the metal parts by inspection certificate 3.1 according to EN 10204:2004, the documents shall be stored
  Marking of the anchor rod with the envisage embedment depth. This may be done by the manufacturer of the rod or by a person on job site

Table B4.1: Installation parameters for anchor rods in solid bricks and autoclaved aerated concrete without perforated sleeves

Anchor rod	Thread	M6	M8	M10	M12	M16
Nominal drill hole diameter	d_0 [mm]	8	10	12	14	18
Effective anchorage depth h_{ef} [1] in AAC cylindrical drill hole	$h_{0,min}=h_{ef,min}$ [mm]	100				
	$h_{0,max}=h_{ef,max}$ [mm]	200				
Effective anchorage depth h_{ef} [1] in AAC conical drill hole	h_o [mm]	-	h_{ef} + 5			-
	$h_{ef,1}$ [mm]		75			
	$h_{ef,2}$ [mm]		95			
Effective anchorage depth h_{ef} [1] in solid brick (depth of drill hole $h_0 = h_{ef}$)	$h_{ef,min}$ [mm]	50				
	$h_{ef,max}$ [mm]	h-30, ≤200				
Diameter of clearance hole in the fixture	pre-position $d_f \leq$ [mm]	7	9	12	14	18
	push through $d_f \leq$ [mm]	9	11	14	16	20
Diameter of cleaning brush	$d_b \geq$ [mm]	see Table B8.1				
Maximum installation torque	T_{inst} [Nm]	see parameters of brick				

[1] $h_{ef,min} \leq h_{ef} \leq h_{ef,max}$ is possible.

fischer anchor rods M6, M8, M10, M12, M16

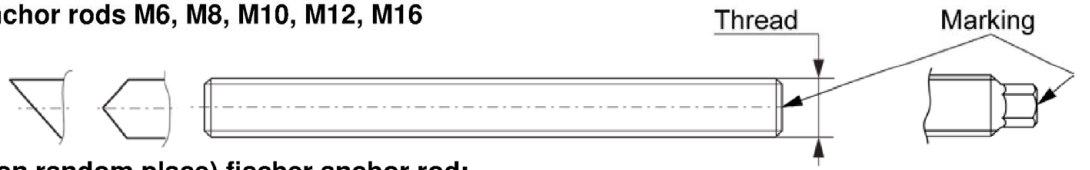

Marking (on random place) fischer anchor rod:

Steel zinc plated PC[1] 8.8	• or +	Steel hot-dip galvanised PC[1] 8.8	•
High corrosion resistant steel HCR PC[1] 50	•	High corrosion resistant steel HCR PC[1] 70	–
High corrosion resistant steel HCR PC[1] 80	(	Stainless steel R property class 50	~
Stainless steel R property class 80	*		

Alternatively: Colour coding according to DIN 976-1: 2016; property class 4.6 marking according to EN ISO 898-1:2013

[1] PC = property class

Installation conditions:

Anchor rod in cylindrical drill hole

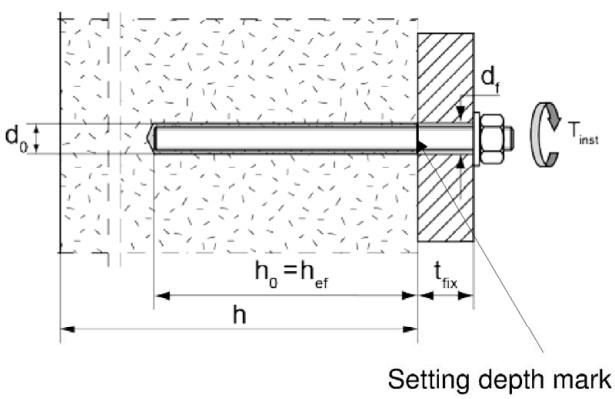

Anchor rod in conical drill hole

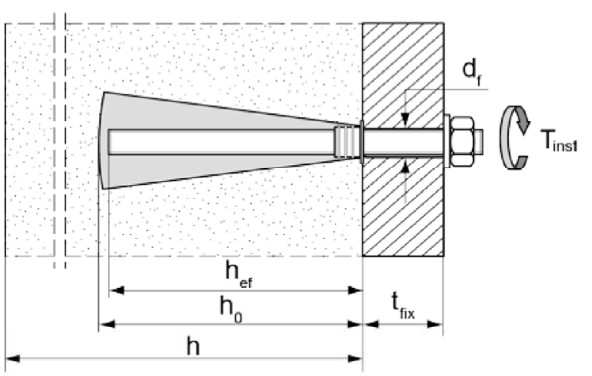

Pictures not to scale

fischer injection system FIS V for masonry

Intended Use
Installation parameters for anchor rods without perforated sleeve

Annex B 4

Table B5.1: Installation parameters for internal threaded anchors FIS E in solid bricks and autoclaved aerated concrete without perforated sleeves

Internal threaded anchor FIS E		11x85 M6	11x85 M8	15x85 M10	15x85 M12
Diameter of anchor	d_H [mm]	11		15	
Nominal drill hole diameter	d_0 [mm]	14		18	
Length of anchor	L_H [mm]	85			
Effective anchorage depth	$h_0 = h_{ef}$ [mm]	85			
Effective anchorage depth h_{ef} in AAC (conical drill hole)	h_0 [mm]	100		-	
	h_{ef} [mm]	85			
Diameter of cleaning brush	$d_b \geq$ [mm]	see Table B8.1			
Maximum installation torque	T_{inst} [Nm]	see parameters of brick			
Diameter of clearance hole in the fixture	d_f [mm]	7	9	12	14
Screw-in depth	$l_{E,min}$ [mm]	6	8	10	12
	$l_{E,max}$ [mm]	60			

fischer Internal threaded anchor FIS E

FIS E 11x85 M6, FIS E 11x85 M8

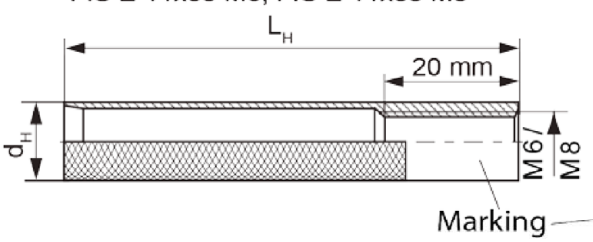

FIS E 15x85 M10, FIS E 15x85 M12

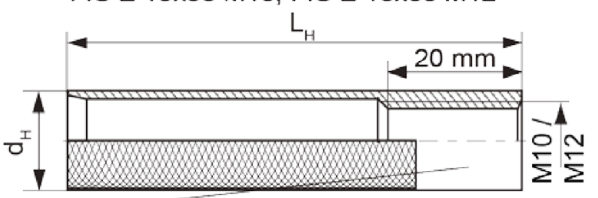

Marking:

Size, e.g. **M8**, Stainless steel: R, e.g. **M8 R**, High corrosion-resistant steel: HCR, e.g. **M8 HCR**

Installation conditions:

Internal threaded anchor in cylindrical drill hole

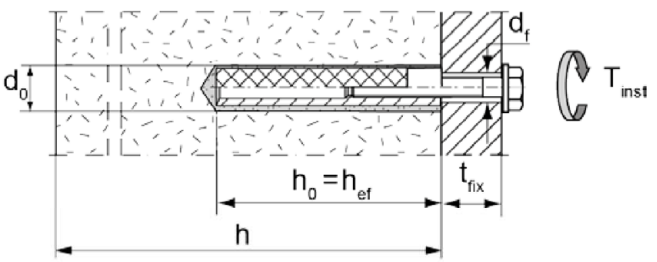

Internal threaded anchor in conical drill hole

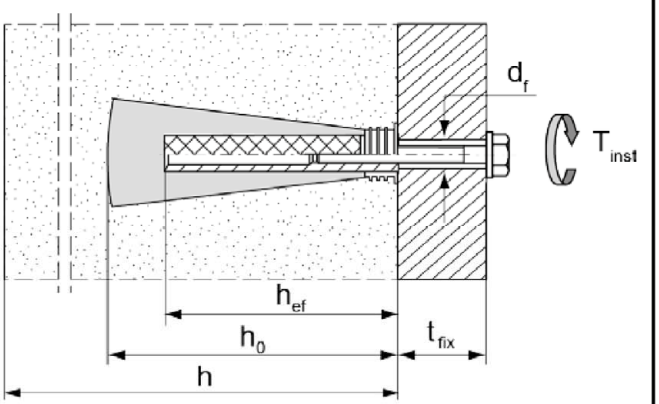

Pictures not to scale

fischer injection system FIS V for masonry

Intended Use
Installation parameters for internal threaded rods FIS E without perforated sleeve

Annex B 5

Appendix 11/ 131

Table B6.1: Installation parameters for anchor rods and internal threaded anchors FIS E with perforated sleeves (pre-positioned anchorage)

perforated sleeve FIS H K		12x50	12x85[2)]	16x85	16x130[2)]	20x85	20x130[2)]	20x200[2)]
Nominal drill hole diameter $d_0 = D_{sleeve,nom}$	d_0 [mm]	12		16		20		
Depth of drill hole	h_0 [mm]	55	90	90	135	90	135	205
Effective anchorage depth	$h_{ef,min}$ [mm]	50	65	85	110	85	110	180
	$h_{ef,max}$ [mm]	50	85	85	130	85	130	200
Size of threaded rod	[-]	M6 und M8		M8 und M10		M12 und M16		
Size of internal threaded anchor FIS E		-	-	11x85	-	15x85	-	-
Diameter of cleaning brush[1)]	$d_b \geq$ [mm]	see Table B8.1						
Maximum installation torque	T_{inst} [Nm]	see parameters of brick						

[1)] Only for solid areas in hollow bricks and solid bricks.

[2)] Bridging of unbearing layer (e.g. plaster) is possible. When reducing the effective anchorage depth $h_{ef,min}$, the values of the next shorter perforated sleeve of the same diameter must be used. The smaller value of charastereristic resistance must be taken.

Perforated sleeve

FIS H 12x50 K; FIS H 12x85 K; FIS H 16x85 K; FIS H 16x130 K;
FIS H 20x85 K; FIS H 20x130 K; FIS H 20x200 K

Marking:
Size $D_{sleeve,nom}$ x L_{sleeve}
(e.g.: 16x85)

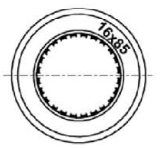

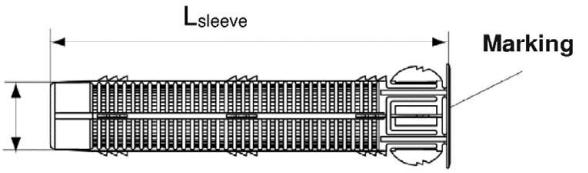

fischer Internal threaded anchor FIS E

FIS E 11x85 M6, FIS E 11x85 M8

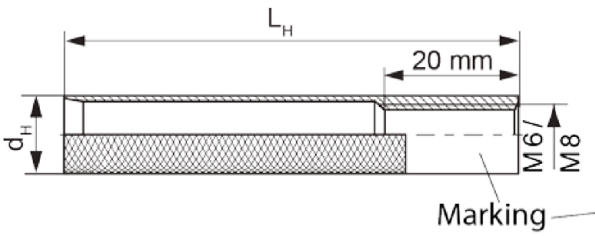

FIS E 15x85 M10, FIS E 15x85 M12

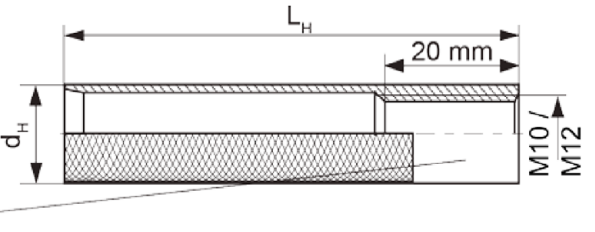

Installation conditions:

Anchor rod with perforated sleeve

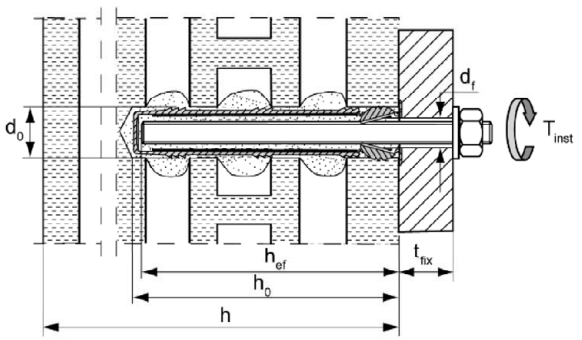

Internal threaded anchor with perforated sleeve

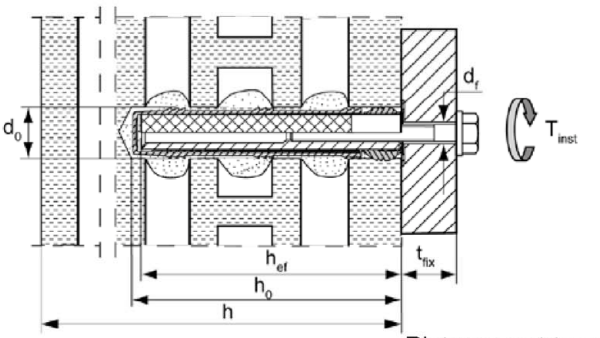

Pictures not to scale

fischer injection system FIS V for masonry

Intended Use
Installation parameters for anchor rods and internal threaded anchors FIS E with perforated sleeve (pre-positioned anchorage)

Annex B 6

Appendix 12/ 131

Table B7.1: Installation parameters for anchor rods with perforated sleeves (push through anchorage)

Perforated sleeve FIS H K		**18x130/200**		**22x130/200**
Nominal sleeve diameter	$D_{sleeve,nom}$ [mm]	16		20
Nominal drill hole diameter	d_0 [mm]	18		22
Depth of drill hole	h_0 [mm]	135		
Effective anchorage depth	h_{ef} [mm]	≥130		
Diameter of cleaning brush [1]	$d_b \geq$ [mm]	Siehe Tabelle B8.1		
Size of threaded rod	[-]	M10	M12	M16
Maximum installation torque	T_{inst} [Nm]	see parameters of brick		
Thickness of fixture	$t_{fix,max}$ [mm]	200		

[1] Only for solid areas in hollow bricks and solid bricks.

Perforated sleeve

FIS H 18x130/200 K; FIS H 22x130/200 K

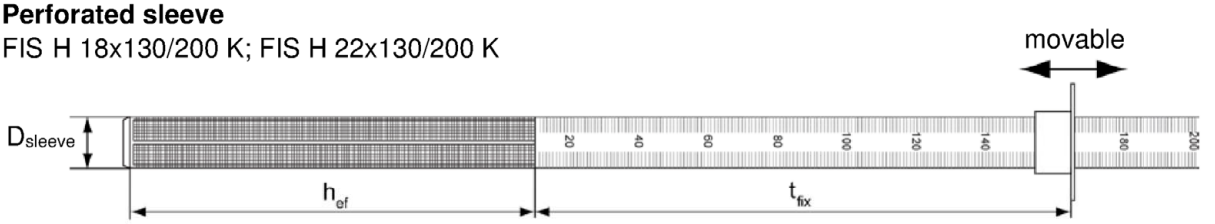

Installation conditions:

Anchor rod with perforated sleeve

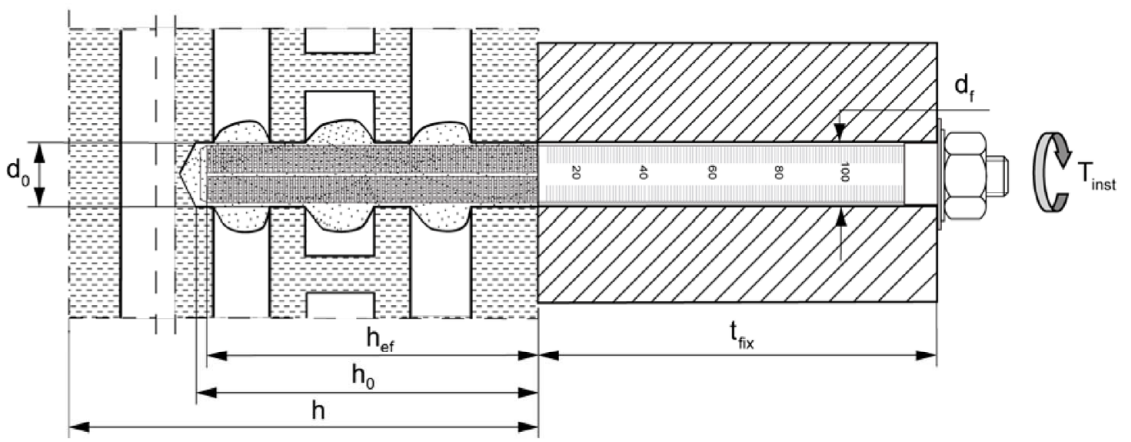

Pictures not to scale

fischer injection system FIS V for masonry

Intended Use
Installation parameters for anchor rods with perforated sleeves (push through anchorage)

Annex B 7

Tabelle B8.1: Parameters of the cleaning brush BS (steel brush with steel bristles)

The size of the cleaning brush refers to the drill hole diameter

Drill hole diameter	d_0 [mm]	8	10	12	14	16	18	20	22
Brush diameter	d_b [mm]	9	11	14	16	20	20	25	25

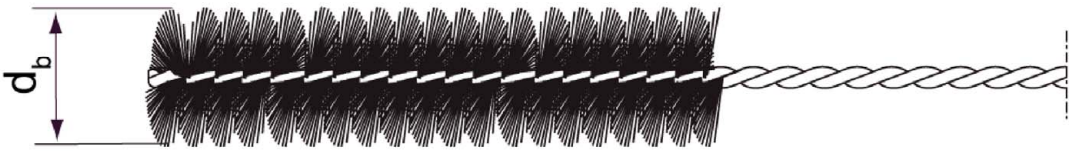

Only for solid bricks and autoclaved aerated concrete

Table B8.2: Maximum processing times and minimum curing times
(During the curing time of the mortar the masonry temperature may not fall below the listed minimum temperature)

Temperature at anchoring base [°C]	Maximum processing time t_{work}			Minimum curing time [1] t_{cure}		
	FIS VW High Speed [3]	FIS V [2]	FIS VS Low Speed [2]	FIS VW High Speed [3]	FIS V [2]	FIS VS Low Speed [2]
> 0 to 5	5 min	13 min	20 min	3 h	3 h	6 h
> 5 to 10	3 min	9 min	20 min	50 min	90 min	3 h
> 10 to 20	1 min	5 min	10 min	30 min	60 min	2 h
> 20 to 30	-	4 min	6 min	-	45 min	60 min
> 30 to 40	-	2 min	4 min	-	35 min	30 min

[1] For wet bricks the curing time must be doubled

[2] Minimum cartridge temperature +5°C

[3] Minimum cartridge temperature ±0°C

Pictures not to scale

Installation instruction part 1

Installation in solid brick and autoclaved aerated concrete (without perforated sleeve)

1	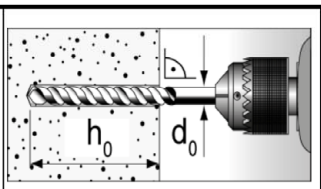	Drill the hole (drilling method see Annex C of the respective brick) depth of drill hole $\mathbf{h_0}$ and drill hole diameter $\mathbf{d_0}$ see **Table B4.1; B5.1**		
2	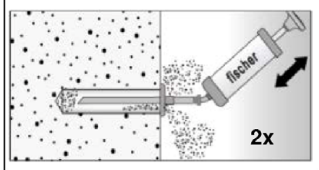	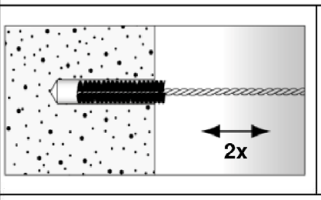	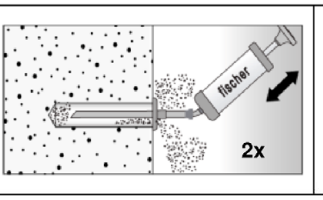	Blow out the drill hole twice. Brush twice and blow out twice again.
3	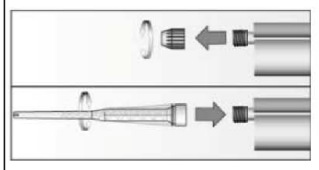	Remove the sealing cap. Screw on the static mixer. (the spiral in the static mixer must be clearly visible)		
4	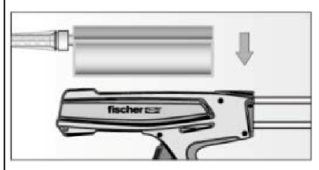	Place the cartridge into a suitable dispenser	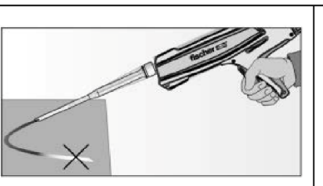	Press out approximately 10 cm of mortar until the resin is permanently grey in colour. Mortar which is not grey in colour will not cure and must be disposed of.
5	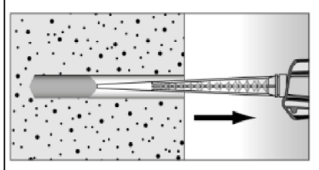	Fill approximetly 2/3 of the drill hole with mortar beginning from the bottom of the hole[1]. Avoid bubbles!	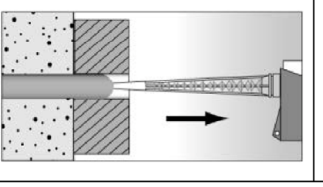	For push through anchorage fill the annular clearance with mortar.
6	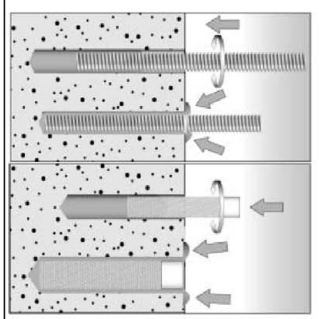	Only use clean and oil-free metal parts. Mark the anchor rod for setting depth. Insert the anchor rod or internal threaded anchor FIS E by hand using light turning motions. When reaching the setting depth marking, excess mortar must emerge from the mouth of the drill hole.		
7		Do not touch. Minimum curing time see Table **B8.2**	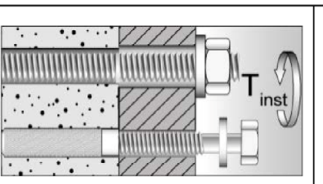	Mounting the fixture. T_{inst} see parameter of brick.

[1] Exact volume of mortar see manufacturer´s specification.

Installation instruction part 2

Installation in perforated or solid brick with perforated sleeve (pre-positioned anchorage)

1	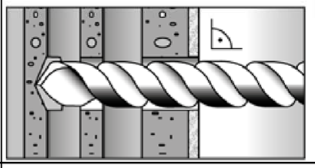	Drill the hole (drilling method see Annex C of the respective brick). depth of drill hole h_0 and drill hole diameter d_0 see **Table B6.1**	When install perforated sleeves in solid bricks or solid areas of hollow bricks, also clean the hole by blowing out and brushing.	
2	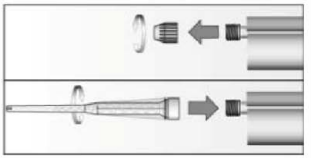	Remove the sealing cap. Screw on the static mixer. (the spiral in the static mixer must be clearly visible)		
3	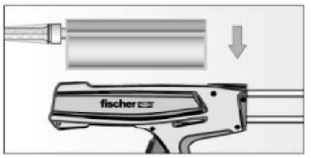	Place the cartridge into a suitable dispenser.	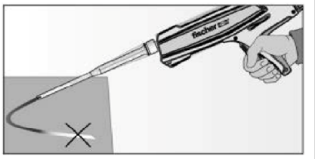	Press out approximately 10 cm of mortar until the resin is permanently grey in colour. Mortar which is not grey in colour will not cure and must be disposed of.
4	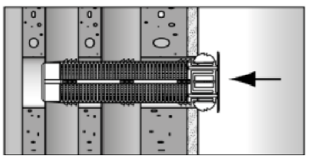	Insert the perforated sleeve flush with the surface of the masonry or plaster.	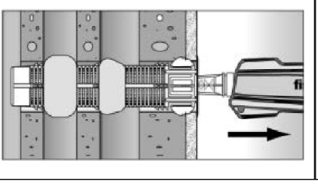	Fill the perforated sleeve completely with mortar beginning from the bottom of the hole[1].
5	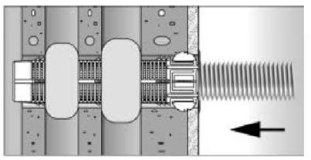	Only use clean and oil-free metal parts. Mark the ancher rod for setting depth. Insert the anchor rod or the internal threaded anchor FIS E by hand using light turning motions until reaching the setting depth marking (anchor rod) or flush with the surface (internal threaded anchor).		
6		Do not touch. Minimum curing time see Table **B8.2**	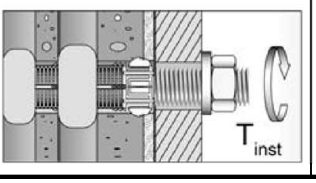	Mounting the fixture. T_{inst} see parameter of brick.

[1] Exact volume of mortar see manufacturer´s specification.

Installation instruction part 3

Installation in perforated or solid brick with perforated sleeve (push through anchorage)

1	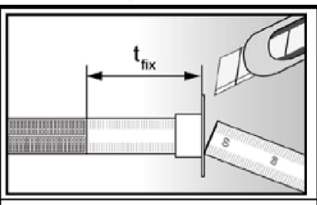	Push the movable stop up to the correct thickness of fixture and cut the overlap.	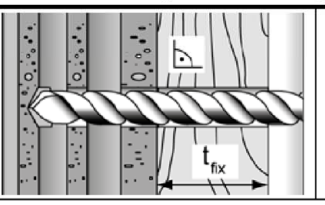	Drill the hole through the fixture. Depth of drill hole **(h_0 + t_{fix})** and drill hole diameter see **Table B7.1**
2	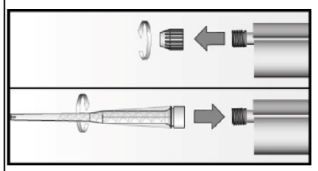	Remove the sealing cap. Screw on the static mixer. (the spiral in the static mixer must be clearly visible)		
3	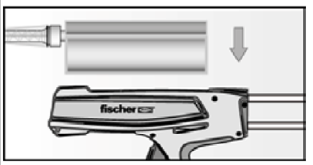	Place the cartridge into a suitable dispenser.	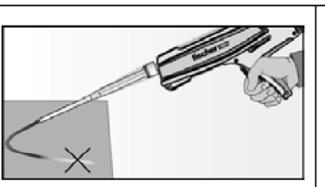	Press out approximately 10 cm of mortar until the resin is permanently grey in colour. Mortar which is not grey in colour will not cure and must be disposed of.
4	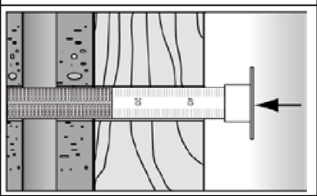	Insert the perforated sleeve flush with the surface of the fixture into the drill hole.	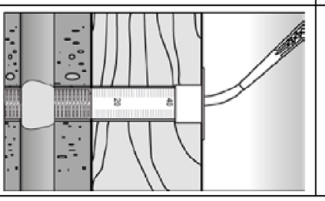	Fill the sleeve with mortar beginning from the bottom of the hole.[1] For deep drill holes use an extension tube.
5	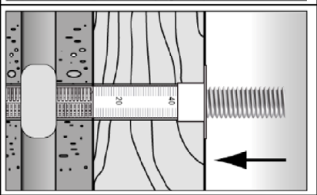	Only use clean and oil-free metal parts. Mark the anchor rod for setting depth. Insert the anchor rod or the internal threaded anchor FIS E by hand using light turning motions until reaching the setting depth marking (anchor rod) or flush with the surface (internal threaded anchor).		
6		Do not touch. Minimum curing time see Table **B8.2**	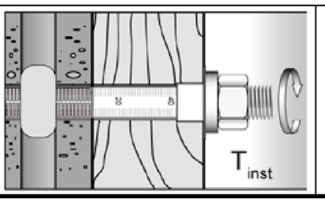	Mounting the fixture. T_{inst} see parameter of brick.

[1] Exact volume of mortar see manufacturer´s specification.

Installation instruction part 4

Installation in autoclaved aerated concrete with special conic drill bit PBB (pre-positioned anchorage)

1	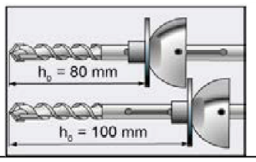	Position the movable drill bit arrester on the used drill hole depth (see Annex B 4, Table B4.1) For this, unlock the clamp screw and slide the arrester. Now fix the clamp screw.		
2	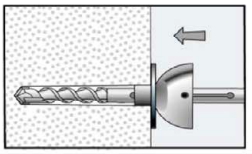	Drill the cylindrical hole with rotating drill until the arrester contact the material surface. (drilling method see Annex C of the respective brick)		
3	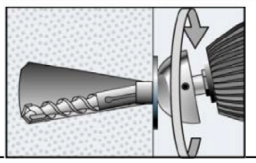	Deviate the working power drill circulate to generate an conic undercut in the material.		
4	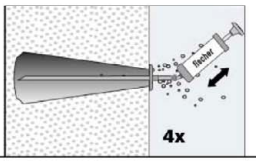	Blow out the drill hole four times.		
5	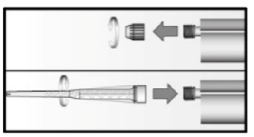	Remove the sealing cap. Screw on the static mixer. (the spiral in the static mixer must be clearly visible)		
6	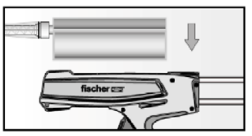	Place the cartridge into a suitable dispenser.	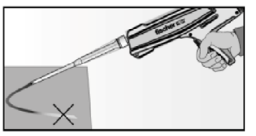	Press out approximately 10 cm of mortar until the resin is permanently grey in colour. Mortar which is not grey in colour will not cure and must be disposed of.
7	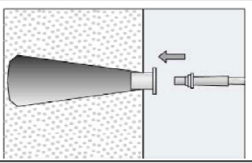	Put the center sleeve into the drill hole and adapt the injection adapter onto the static mixer.	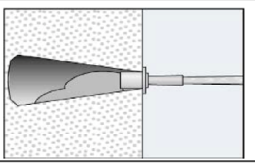	Fill the drill hole with injection mortar.
8	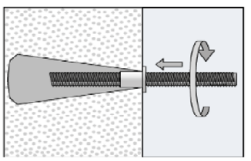	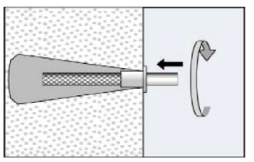	Only use clean and oil-free metal parts. Mark the anchor rod for setting depth. Insert the anchor rod or internal threaded anchor FIS E by hand using light turning motions. When reaching the setting depth marking, excess mortar must emerge from the mouth of the drill hole.	
9		Do not touch. Minimum curing time see **Table B8.2**	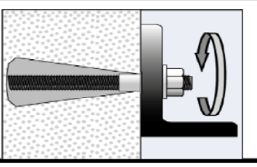	Mounting the fixture. T_{inst} see parameter of brick.

fischer injection system FIS V for masonry

Intended use
Installation instruction for autoclaved aerated concrete with special conic drill bit PBB (pre-positioned anchorage) part 4

Annex B 12

Appendix 18/ 131

Table B13.1: Overview of controlled bricks (part 1)

Kind of masonry	Brick format [mm]	Compressive strength f_b [N/mm²]	Producing counrty	Density ρ [kg/dm³]	Annex
Solid brick Mz					
Solid brick Mz	**NF** ≥240x115x71	12 - 20	Germany	≥1,8	C4 - C7
	2DF ≥240x115x113	10 - 16	Germany	≥1,8	C8/C9
	≥ 245x118x54	10 - 20	Italy	≥1,8	C10/C11
	≥ 230x108x55	10 - 20	Denmark	≥1,8	C12/C13
Solid sand- lime brick KS / perforated Sand- lime brick KSL					
Solid sand - lime brick KS	**NF** ≥240x115x71	12 - 28	Germany	≥2,0	C14/C15
	8DF ≥ 250x240x240	10 - 28	Germany	≥2,0	C16/C17
	≥ 997x214x538	10 - 36	Netherlands	≥1,8	C18/C19
Perforated sand - lime brick KSL	**3DF** 240x175x113	8 - 20	Germany	≥1,4	C20 - C23
Vertical perforated brick HLz					
Vertical perforated brick HLz	370x240x237	4 - 12	Germany	≥1,0	C24/C25
	500x175x237	4 - 12	Germany	≥1,0	C24/C25
	2DF 240x115x113	6 - 28	Germany	≥1,4	C26/C27
	248x365x248	4 - 8	Germany	≥0,6	C28 - C31
	248x365x249	8 - 12	Germany	≥0,7	C32 - C35
	248x365x249	4 - 6	Germany	≥0,5	C36 - C39
	248x425x248	4 - 8	Germany	≥0,8	C40 - C43
	248x425x248	4 - 8	Germany	≥0,6	C44 - C47
	500x200x315	4 - 8	France	≥0,6	C48 - C51
	500x200x300	4 - 10	France	≥0,7	C52 - C55
	500x200x315	2 - 8	France	≥0,7	C56 - C59
	560x200x275	4 - 8	France	≥0,7	C60/C61
	255x120x118	2 - 12	Italy	≥1,0	C62 - C64
	275x130x94	6 - 20	Spain	≥0,8	C65/C66
	220x190x290	6 - 10	Portugal	≥0,7	C67 - C70
	253x300x240	2 - 6	Austria	≥0,8	C71 - C74
	250x440x250	6 - 10	Austria	≥0,7	C75 - C78
	230x108x55	2 - 8	Denmark	≥1,4	C79/C80
Horizontal perforated brick LLz					
Horizontal perforated brick LLz	248x78x250	2 - 6	Italy	≥0,7	C81/C82
	128x88x275	2	Spain	≥0,8	C83/C84
Light-weight concrete hollow block Hbl					
Light-weight concrete hollow block Hbl	362x240x240	2 - 4	Germany	≥1,0	C85 - C88
	500x200x200	2 - 6	France	≥1,0	C89/C90
	440x215x215	4 - 10	Ireland	≥1,2	C91 - C94

Table B14.1: Overview of controlled bricks (part 2)

Kind of masonry	Brick format [mm]	Compressive strength f_b [N/mm^2]	Producing counrty	Density ρ [kg/dm^3]	Annex
Light-weight concrete solid block Vbl					
Light-weight concrete solid block Vbl	≥ 372x300x254	2	Germany	≥0,6	C95/C96
	≥ 250x240x239	4 - 8	Germany	≥1,6	C97 - C100
	≥ 440x100x215	4 - 10	Ireland	≥2,0	C101/C102
	≥ 440x95x215	6 - 12	England	≥2,0	C103/C104
Autoclaved aerated concrete (AAC)					
PP2 / AAC	-	2	Germany	0,35	C105 - C109
PP4 / AAC	-	4	Germany	0,5	C105 - C109
PP6 / AAC	-	6	Germany	0,65	C105 - C109

Spacing and edge distance

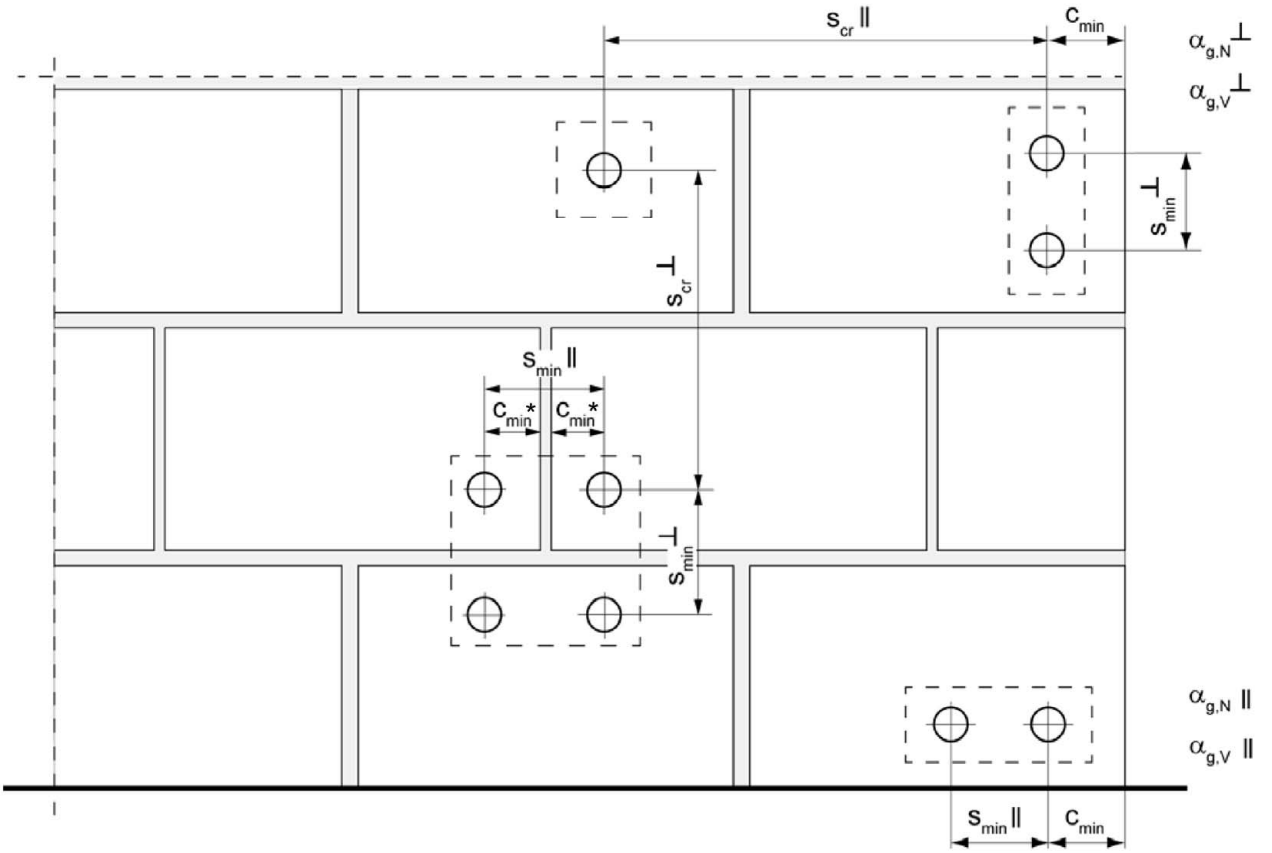

* Only, if vertical joints are not completely filled with mortar

s_{min} II	=	Minimum spacing parallel to bed joint
s_{min} ⊥	=	Minimum spacing vertical to bed joint
s_{cr} II	=	Characteristic spacing parallel to bed joint
s_{cr} ⊥	=	Characteristic spacing vertical to bed joint
$c_{cr} = c_{min}$	=	Edge distance
$\alpha_{g,N}$ II	=	Group factor for tensile load, anchor group parallel to bed joint
$\alpha_{g,V}$ II	=	Group factor for shear load, anchor group parallel to bed joint
$\alpha_{g,N}$ ⊥	=	Group factor for tensile load, anchor group vertical to bed joint
$\alpha_{g,V}$ ⊥	=	Group factor for shear load, anchor group vertical to bed joint

For $s \geq s_{cr}$ $\alpha_g = 2$

For $s_{min} \leq s < s_{cr}$ α_g according to installation parameters of brick

$N^g_{Rk} = \alpha_{g,N} \bullet N_{Rk}$; $V^g_{Rk} = \alpha_{g,V} \bullet V_{Rk}$ (Group of 2 anchors)

$N^g_{Rk} = \alpha_{g,N}$ II $\bullet$ $\alpha_{g,N}$⊥ $\bullet N_{Rk}$; $V^g_{Rk} = \alpha_{g,V}$ II $\bullet$ $\alpha_{g,V}$⊥ $\bullet V_{Rk}$ (Group of 4 anchors)

Table C1.1: Characteristic values for the **steel bearing capacity** of **anchor rods** under tensile load

Anchor rod					**M6**	**M8**	**M10**	**M12**	**M16**
Bearing capacity under tensile load, steel failure									
Characteristic resistance $N_{Rk,s}$	Steel zinc plated	Property class	4.6	[kN]	8	15(13)	23(21)	33	63
			4.8		8	15(13)	23(21)	33	63
			5.8		10	19(17)	29(27)	43	79
			8.8		16	29(27)	47(43)	68	126
	Stainless steel R and High corrosion resistant steel HCR		50		10	19	29	43	79
			70		14	26	41	59	110
			80		16	30	47	68	126
Partial factors [1]									
Partial factor $\gamma_{Ms,N}$	Steel zinc plated	Property class	4.6	[-]	2,00				
			4.8		1,50				
			5.8		1,50				
			8.8		1,50				
	Stainless steel R and High corrosion resistant steel HCR		50		2,86				
			70		1,50[2] / 1,87				
			80		1,60				

[1] In absence of other national regulations

[2] Only for fischer FIS A made of high corrosion-resistant steel HCR

[3] Values in brackets are valid for undersized threaded rods with smaller stress area A_s for hot dip galvanised standard threaded rods according to EN ISO 10684:2004+AC:2009

Table C2.1: Characteristic values for the **steel bearing capacity** of **anchor rods** under shear load

Anchor rod				**M6**	**M8**	**M10**	**M12**	**M16**
Bearing capacity under shear load, steel failure								
without lever arm								
Characterstic resistance $V^0_{Rk,s}$	Steel zinc plated	Property class	4.6	4	9(8)	14(13)	20	38
			4.8	4	9(8)	14(13)	20	38
			5.8	6	11(10)	17(16)	25	47
			8.8	8	15(13)	23(21)	34	63
	Stainless steel R and High corrosion resistant steel HCR		50	5	9	15	21	39
			70	7	13	20	30	55
			80	8	15	23	34	63
		[kN]						
with lever arm								
Characterstic resistance $M^0_{Rk,s}$	Steel zinc plated	Property class	4.6	6	15(13)	30(27)	52	133
			4.8	6	15(13)	30(27)	52	133
			5.8	7	19(16)	37(33)	65	166
			8.8	12	30(26)	60(53)	105	266
	Stainless steel R and High corrosion resistant steel HCR		50	7	19	37	65	166
			70	10	26	52	92	232
			80	12	30	60	105	266
		[Nm]						
Partial factors[1)]								
Partial factor $\gamma_{Ms,V}$	Steel zinc plated	Property class	4.6	1,67				
			4.8	1,25				
			5.8	1,25				
			8.8	1,25				
	Stainless steel R and High corrosion resistant steel HCR		50	2,38				
			70	1,25[2)] / 1,56				
			80	1,33				
		[-]						

[1)] In absence of other national regulations

[2)] Only for fischer FIS A made of high corrosion-resistant steel HCR

[3)] Values in brackets are valid for undersized threaded rods with smaller stress area A_s for hot dip galvanised standard threaded rods according to EN ISO 10684:2004+AC:2009.

Table C3.1: Characteristic values for the **steel bearing capacity** of **internal threaded anchors FIS E** under tensile / shear load

fischer internal threaded anchor FIS E					**M6**	**M8**	**M10**	**M12**
Bearing capacity under tensile load, steel failure								
Characterstic resistance with screw	$N_{Rk,s}$	Property class	5.8	[kN]	10	18	29	42
		Property class 70	R		14	26	41	59
			HCR		14	26	41	59
Partial factors[1)]								
Partial factor	$\gamma_{Ms,N}$	Property class	5.8	[-]	1,50			
		Property class 70	R		1,87			
			HCR		1,87			
Bearing capacity under shear load, steel failure								
without lever arm								
Characterstic resistance with screw	$V_{Rk,s}$	Property class	5.8	[kN]	5	9	15	21
		Property class 70	R		7	13	20	30
			HCR		7	13	20	30
with lever arm								
Characterstic resistance	$M^0_{Rk,s}$	Property class	5.8	[Nm]	8	19	37	65
		Property class 70	R		11	26	52	92
			HCR		11	26	52	92
Partial factors[1)]								
Partial factor	$\gamma_{Ms,V}$	Property class	5.8	[-]	1,25			
		Property class 70	R		1,56			
			HCR		1,56			

[1)] In absence of other national regulations

Solid brick Mz, NF, EN 771-1

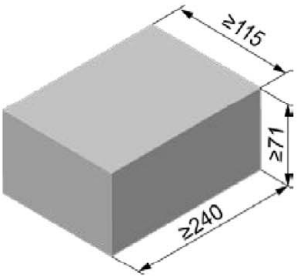

Solid brick Mz, NF, EN 771-1				
Producer		e.g. Wienerberger		
Nominal dimensions	[mm]	length L	width W	height H
		≥ 240	≥ 115	≥ 71
Density ρ	[kg/dm³]	≥ 1,8		
Compressive strength f_b	[N/mm²]	12 / 20		
Standard or annex		EN 771-1		

Table C4.1: Installation parameters for edge distance c=100mm

Anchor rod			**M6**	**M8**	**M10**	**M12**	**-**		**-**	
Internal threaded anchor FIS E			**-**	**-**	**-**	**-**	**M6**	**M8**	**M10**	**M12**
							11x85		**15x85**	
Anchor rod and internal threaded anchor FIS E without perforated sleeve										
Effective anchorage depth	h_{ef}	[mm]	50	50	50	50	85			
			80	80	80	80				
			200	200	200	200				
Max. installation torque	T_{inst}	[Nm]	4	10			4	10		
General installation parameters										
Edge distance	c_{min}	[mm]	100				100			
Edge distance h_{ef}=200	c_{min}		150				-[1]			
Spacing	s_{min} II,N		60				60			
	h_{ef}=200 s_{min} II,N		240				-[1]			
	s_{min} II,V		240				240			
	s_{cr} II		240				240			
	s_{cr} ⊥ = s_{min} ⊥		75				75			
Drilling method										
Hammer drilling with hard metal hammer drill										

[1] No performance assessed

Table C4.2: Group factors

Anchor rods			**M6**	**M8**	**M10**	**M12**	**-**		**-**	
Internal threaded anchor FIS E			**-**	**-**	**-**	**-**	**M6**	**M8**	**M10**	**M12**
							11x85		**15x85**	
Edge distance	c_{min}	[mm]	**100**							
Group factor	$\alpha_{g,N}$ II	[-]	1,5							
	$\alpha_{g,V}$ II		2,0							
	h_{ef}=200 $\alpha_{g,N}$ II		1,5							
	h_{ef}=200 $\alpha_{g,V}$ II		2,0							
	$\alpha_{g,N}$ ⊥		2,0							
	$\alpha_{g,V}$ ⊥		2,0							
	h_{ef}=200 $\alpha_{g,N}$ ⊥		2,0							
	h_{ef}=200 $\alpha_{g,V}$ ⊥		2,0							

Solid brick Mz, NF, EN 771-1

Table C5.1: Characteristic resistance under tensile load for edge distance c=100mm

Anchor rod		**M6**	**M8**	**M10**		**M12**			**-**		**-**	
Internal threaded anchor FIS E		**-**	**-**	**-**		**-**			**M6**	**M8**	**M10**	**M12**
									11x85		**15x85**	
Tensile load N_{Rk} [kN] depending on the compressive strength f_b (temperature range 50/80°C)												
compressive strength f_b	use categorie	Effective anchorage depth h_{ef} [mm]										
		≥50	≥50	50	80	200	50	80	200	85		
12N/mm²	w/w w/d	2,5	2,5	2	3	7,5	2	3,5	5	3,5		
	d/d	4	4	3,5	5	12	3	5,5	8	5,5		
20N/mm²	w/w w/d	3,5	3,5	3	4,5	11	3	5	7	5		
	d/d	5,5	5,5	5	7	12	4,5	8	11,5	8		

Factor for temperature range 72/120°C: 0,83

Table C5.2: Characteristic resistance under shear load for edge distance c=100mm

Anchor rod		**M6**	**M8**	**M10**		**M12**		**-**		**-**	
Internal threaded anchor FIS E		**-**	**-**	**-**		**-**		**M6**	**M8**	**M10**	**M12**
								11x85		**15x85**	
Shear load V_{Rk} [kN] depending on the compressive strength f_b (temperature range 50/80°C and 72/120°C)											
compressive strength f_b	use categorie	Effective anchorage depth h_{ef} [mm]									
		≥50	≥50	≥50	200	≥50	200	85			
12N/mm²	w/w w/d d/d	2,5	2,5	4	8,5	4	11,5	2,5			
20N/mm²	w/w w/d d/d	4,0	4,0	6	12	5,5	12	4			

Factor for job site tests and displacements see annex C110

Solid brick Mz, NF, EN 771-1

Table C6.1: Installation parameters for edge distance c=60mm

Anchor rod			M6	M8	M10	M12	M16	-	-
Internal threaded anchor FIS E			-	-	-	-	-	M6 / M8: 11x85	M10 / M12: 15x85
Anchor rod and internal threaded anchor FIS E without perforated sleeve									
Effective anchorage depth	h_{ef}	[mm]	50	50	50	50	50	85	
			100	100	100	100	100		
			200	200	200	200	200		
Max. installation torque	T_{inst}	[Nm]	4	10				4	10
General installation parameters									
Edge distance	c_{min}	[mm]	60						
Edge distance h_{ef}=200	c_{min}	[mm]	60						
Spacing	s_{min} II,N	[mm]	80						
	h_{ef}=200 s_{min} II,N	[mm]	80						
	s_{min} II,v	[mm]	80						
	s_{cr} II	[mm]	3x h_{ef}						
	s_{min} ⊥	[mm]	80						
	s_{cr} ⊥	[mm]	3x h_{ef}						
Drilling method									
Hammer drilling with hard metal hammer drill									

Table C6.2: Group factors

Anchor rods			M6	M8	M10	M12	M16	-	-
Internal threaded anchor FIS E			-	-	-	-	-	M6 / M8: 11x85	M10 / M12: 15x85
Edge distance	c_{min}	[mm]	60						
Group factor	$\alpha_{g,N}$ II	[-]	0,6						
	$\alpha_{g,V}$ II	[-]	1,3						
	h_{ef}=200 $\alpha_{g,N}$ II	[-]	1,4						
	h_{ef}=200 $\alpha_{g,V}$ II	[-]	1,5						
	$\alpha_{g,N}$ ⊥	[-]	0,3						
	$\alpha_{g,V}$ ⊥	[-]	1,3						
	h_{ef}=200 $\alpha_{g,N}$ ⊥	[-]	2,0						
	h_{ef}=200 $\alpha_{g,V}$ ⊥	[-]	1,1						

Solid brick Mz, NF, EN 771-1

Table C7.1: Characteristic resistance under tensile load for edge distance c=60mm

Anchor rod		M6	M8	M10	M12	M16	-	-
Internal threaded anchor FIS E		-	-	-	-	-	M6 / M8: 11x85	M10 / M12: 15x85

Tensile load N_{Rk} [kN] depending on the compressive strength f_b (temperature range 50/80°C)

compressive strength f_b	use category	Effective anchorage depth h_{ef} [mm]													
		50	100	50	100	50	100	200	50	100	200	50	100	200	85
12N/mm²	w/w w/d	1,5		2,0	2,0	2,0	2,5	-[1]	2,0	2,5	-[1]	2,0	5,5	-[1]	-[1]
	d/d	2,5		3,0	4,0	3,0	4,0	9,5	3,0	4,0	9,5	3,0	8,5	9,5	-[1]
20N/mm²	w/w w/d	2,0		2,5	3,0	2,5	3,5	-[1]	3,0	3,5	-[1]	3,0	7,5	-[1]	-[1]
	d/d	3,5		4,5	5,5	4,5	5,5	12	4,5	5,5	12	4,5	12	12	-[1]
28N/mm²	w/w w/d	2,5		3,0	4,0	3,0	4,0	-[1]	3,5	4,0	-[1]	3,5	9,0	-[1]	-[1]
	d/d	4,0		5,5	6,5	5,5	6,5	12	5,5	6,5	12	5,5	12	12	-[1]

[1] No performance assessed

Factor for temperature range 72/120°C: 0,83

Table C7.2: Characteristic resistance under shear load for edge distance c=60mm

Anchor rod		M6	M8	M10	M12	M16	-	-
Internal threaded anchor FIS E		-	-	-	-	-	M6 / M8: 11x85	M10 / M12: 15x85

Shear load V_{Rk} [kN] depending on the compressive strength f_b (temperature range 50/80°C and 72/120°C)

compressive strength f_b	use category	Effective anchorage depth h_{ef} [mm]													
		50	100	50	100	50	100	200	50	100	200	50	100	200	85
12N/mm²	w/w w/d d/d	1,2	2,5	1,2	3,0	2,0	3,0	1,5	1,5	3,0	3,0	0,6	3,0	4,5	-[1]
20N/mm²	w/w w/d d/d	1,5	3,5	1,5	4,5	3,0	4,5	2,5	2,0	4,5	4,5	0,9	4,5	6,0	-[1]
28N/mm²	w/w w/d d/d	2,0	4,0	2,0	5,0	3,5	5,0	3,0	2,5	5,0	5,0	1,2	5,0	7,5	-[1]

[1] No performance assessed

Factor for job site tests and displacements see annex C110

Solid brick Mz, 2DF, EN 771-1

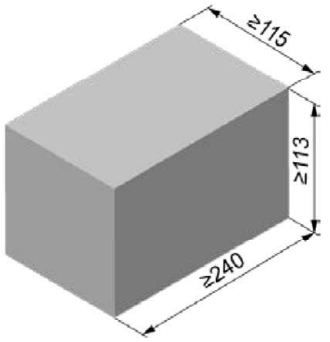

Solid brick Mz, 2DF, EN 771-1			
Producer	e.g. Wienerberger		
Nominal dimensions [mm]	length L	width W	height H
	≥ 240	≥ 115	≥ 113
Density ρ [kg/dm³]	≥ 1,8		
Compressive strength f_b [N/mm²]	10 / 16		
Standard or annex	EN 771-1		

Table C8.1: Installation parameters

Anchor rod			**M6**		**M8**		**M10**		**M12**		**M16**		**-**		**-**	
Internal threaded anchor FIS E			**-**		**-**		**-**		**-**		**-**		**M6**	**M8**	**M10**	**M12**
													11x85		**15x85**	
Anchor rod and internal threaded anchor FIS E without perforated sleeve																
Effective anchorage depth	h_{ef}	[mm]	50	100	50	100	50	100	50	100	50	100	85			
Max. installation torque	T_{inst}	[Nm]	4		10								4		10	
Anchor rod and internal threaded anchor FIS E with perforated sleeve FIS H 16x85 K																
Effective anchorage depth	h_{ef}	[mm]	-[1]		85		-[1]						85		-[1]	
Max. installation torque	T_{inst}	[Nm]			10								4	10		
General installation parameters																
Edge distance	c_{min}	[mm]	60													
Spacing	s_{min} ∥		120													
	s_{cr} ∥		240													
	s_{cr} ⊥ = s_{min} ⊥		115													
Drilling method																
Hammer drilling with hard metal hammer drill																

[1] No performance assessed

Table C8.2: Group factors

Anchor rods			**M6**	**M8**	**M10**	**M12**	**M16**	**-**		**-**	
Internal threaded anchor FIS E			**-**	**-**	**-**	**-**	**-**	**M6**	**M8**	**M10**	**M12**
								11x85		**15x85**	
Group factor	$\alpha_{g,N}$ ∥	[-]	1,5								
	$\alpha_{g,V}$ ∥		1,4								
	$\alpha_{g,N}$ ⊥		2								
	$\alpha_{g,V}$ ⊥										

Solid brick Mz, 2DF, EN 771-1

Table C9.1: Characteristic resistance under tensile load

Anchor rod	**M6**	**M8**	**M10**	**M12**	**M16**	**-**		**-**		**M8**	**M10**	**-**	
Internal threaded anchor FIS E	**-**	**-**	**-**	**-**	**-**	**M6**	**M8**	**M10**	**M12**	**-**	**-**	**M6**	**M8**
						11x85		**15x85**				**11x85**	
Perforated sleeve FIS H K	**-**	**-**	**-**	**-**	**-**	**-**		**-**		**16x85**			

Tensile load N_{Rk} [kN] depending on the compressive strength f_b (temperature range 50/80°C)

compressive strength f_b	use category	Effective anchorage depth h_{ef} [mm]											
		50	100	50	100	50	100	50	100	50	100	85	
10N/mm²	w/w w/d	1,5	2,5	1,5	2,5	1,5	3	2	3,5	2	3,5	2	1,5
	d/d	3	4,0	3,0	4,0	3,0	4,5	3	5,5	3	5,5	3	3
16N/mm²	w/w w/d	2,5	4	2,5	4	2,5	4,5	3,5	5,5	3,5	5,5	3,5	2,5
	d/d	4,5	7,0	4,5	7,0	4,5	7,5	5,5	8	5,5	8	5,5	4,5

Factor for temperature range 72/120°C: 0,83

Table C9.2: Characteristic resistance under shear load

Anchor rod	**M6**	**M8**	**M10**	**M12**	**M16**	**-**		**-**		**M8**	**M10**	**-**	
Internal threaded anchor FIS E	**-**	**-**	**-**	**-**	**-**	**M6**	**M8**	**M10**	**M12**	**-**	**-**	**M6**	**M8**
						11x85		**15x85**				**11x85**	
Perforated sleeve FIS H K	**-**	**-**	**-**	**-**	**-**	**-**		**-**		**16x85**			

Shear load V_{Rk} [kN] depending on the compressive strength f_b (temperature range 50/80°C and 72/120°C)

compressive strength f_b	use category	Effective anchorage depth h_{ef} [mm]												
		≥ 50					85							
10N/mm²	w/w w/d d/d	2,5	3,0	3,0	3,5	3,0	2,5	3,0	3,0	3,0	3,0	3,5	2,5	3,0
16N/mm²	w/w w/d d/d	4,0	5,0	5,5	5,5	5,0	4,0	5,0	5,0	5,0	5,0	6,0	4,0	5,0

Factor for job site tests and displacements see annex C110

Solid brick Mz, EN 771-1

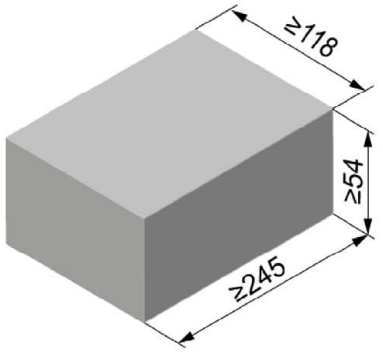

Solid brick Mz, EN 771-1			
Producer	e.g. Nigra		
Nominal dimensions [mm]	length L	width W	height H
	≥ 245	≥ 118	≥ 54
Density ρ [kg/dm³]	≥ 1,8		
Compressive strength f_b [N/mm²]	10 / 20		
Standard or annex	EN 771-1		

Table C10.1: Installation parameters

Anchor rod			**M6**		**M8**		**M10**		**M12**		**M16**		**-**		**-**	
Internal threaded anchor FIS E			**-**		**-**		**-**		**-**		**-**		**M6**	**M8**	**M10**	**M12**
													11x85		**15x85**	
Anchor rod and internal threaded anchor FIS E without perforated sleeve																
Effective anchorage depth	h_{ef}	[mm]	50	100	50	100	50	100	50	100	50	100	85			
Max. installation torque	T_{inst}	[Nm]	4		10								4		10	
General installation parameters																
Edge distance	c_{min}	[mm]	60													
Spacing	s_{cr} ∥ = s_{min} ∥		245													
	s_{cr} ⊥ = s_{min} ⊥		60													
Drilling method																
Hammer drilling with hard metal hammer drill																

Table C10.2: Group factors

Anchor rods			**M6**	**M8**	**M10**	**M12**	**M16**	**-**		**-**	
Internal threaded anchor FIS E			**-**	**-**	**-**	**-**	**-**	**M6**	**M8**	**M10**	**M12**
								11x85		**15x85**	
Group factor	$\alpha_{g,N}$ ∥ $\alpha_{g,V}$ ∥ $\alpha_{g,N}$ ⊥ $\alpha_{g,V}$ ⊥	[-]	2								

Solid brick Mz, EN 771-1

Table C11.1: Characteristic resistance under tensile load

Anchor rod		**M6**	**M8**	**M10**	**M12**	**M16**	**-**		**-**	
Internal threaded anchor FIS E		**-**	**-**	**-**	**-**	**-**	**M6**	**M8**	**M10**	**M12**
							11x85		**15x85**	
Tensile load N_{Rk} [kN] depending on the compressive strength f_b (temperature range 50/80°C)										
compressive strength f_b	use category	Effective anchorage depth h_{ef} [mm] ≥ 50					85			
10N/mm²	w/w w/d	0,6	0,9	0,75	0,75	0,75	0,6	0,75		
	d/d	1,2	1,5	1,2	1,2	1,2	1,2	1,2		
20N/mm²	w/w w/d	0,9	1,5	1,2	1,2	1,2	0,9	1,2		
	d/d	1,5	2,5	2,0	2,0	2,0	1,5	2,0		

Factor for temperature range 72/120°C: 0,83

Table C11.2: Characteristic resistance under shear load

Anchor rod		**M6**	**M8**	**M10**	**M12**	**M16**	**-**		**-**	
Internal threaded anchor FIS E		**-**	**-**	**-**	**-**	**-**	**M6**	**M8**	**M10**	**M12**
							11x85		**15x85**	
Shear load V_{Rk} [kN] depending on the compressive strength f_b (temperature range 50/80°C and 72/120°C)										
compressive strength f_b	use category	Effective anchorage depth h_{ef} [mm] ≥ 50					85			
10N/mm²	w/w w/d d/d	2,0	3,0	4,0	4,5	5,5	2,0	3,0	4,0	4,5
20N/mm²	w/w w/d d/d	2,5	4,0	5,5	6,0	8,0	2,5	4,0	5,5	6,0

Factor for job site tests and displacements see annex C110

Solid brick Mz, EN 771-1

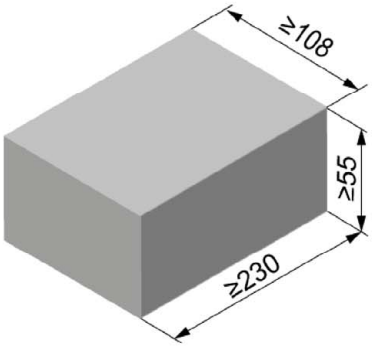

Solid brick Mz, EN 771-1				
Producer		e.g. Wienerberger		
Nominal dimensions [mm]		length L	width W	height H
		≥ 230	≥ 108	≥ 55
Density ρ [kg/dm³]		≥ 1,8		
Compressive strength f_b [N/mm²]		10 / 20		
Standard or annex		EN 771-1		

Table C12.1: Installation parameters

Anchor rod			**M6**		**M8**		**M10**		**M12**		**M16**		**-**		**-**	
Internal threaded anchor FIS E			**-**		**-**		**-**		**-**		**-**		**M6**	**M8**	**M10**	**M12**
													11x85		**15x85**	
Anchor rod and internal threaded anchor FIS E without perforated sleeve																
Effective anchorage depth	h_{ef}	[mm]	50	90	50	90	50	90	50	90	50	90	85			
Max. installation torque	T_{inst}	[Nm]	4		10								4	10		
General installation parameters																
Edge distance	c_{min}	[mm]	60													
Spacing	s_{cr} ∥ = s_{min} ∥		230													
	s_{cr} ⊥ = s_{min} ⊥		60													
Drilling method																
Hammer drilling with hard metal hammer drill																

Table C12.2: Group factors

Anchor rods			**M6**	**M8**	**M10**	**M12**	**M16**	**-**		**-**	
Internal threaded anchor FIS E			**-**	**-**	**-**	**-**	**-**	**M6**	**M8**	**M10**	**M12**
								11x85		**15x85**	
Group factor	$\alpha_{g,N}$ ∥	[-]	2								
	$\alpha_{g,V}$ ∥										
	$\alpha_{g,N}$ ⊥										
	$\alpha_{g,V}$ ⊥										

Solid brick Mz, EN 771-1

Table C13.1: Characteristic resistance under tensile load

Anchor rod		**M6**	**M8**	**M10**	**M12**	**M16**	**-**		**-**	
Internal threaded anchor FIS E		**-**	**-**	**-**	**-**	**-**	**M6**	**M8**	**M10**	**M12**
							11x85		**15x85**	
Tensile load N_{Rk} [kN] depending on the compressive strength f_b (temperature range 50/80°C)										
compressive strength f_b	use category	Effective anchorage depth h_{ef} [mm] ≥ 50					85			
10N/mm²	w/w w/d	0,6	0,9	0,75	0,75	0,75	0,75			
	d/d	1,2	1,5	1,2	1,2	1,2	1,2			
20N/mm²	w/w w/d	0,9	1,5	1,2	1,2	1,2	1,2			
	d/d	1,5	2,5	2,0	2,0	2,0	2,0			

Factor for temperature range 72/120°C: 0,83

Table C13.2: Characteristic resistance under shear load

Anchor rod		**M6**	**M8**	**M10**	**M12**	**M16**	**-**		**-**	
Internal threaded anchor FIS E		**-**	**-**	**-**	**-**	**-**	**M6**	**M8**	**M10**	**M12**
							11x85		**15x85**	
Querlast V_{Rk} [kN] in Abhängigkeit von der Druckfestigkeit f_b (Temperaturbereich 50/80°C und 72/120°C)										
compressive strength f_b	use category	Effective anchorage depth h_{ef} [mm] ≥ 50					85			
10N/mm²	w/w w/d d/d	2,0	3,0	4,0	4,5	5,5	2,0	3,0	4,0	4,5
20N/mm²	w/w w/d d/d	2,5	4,0	5,5	6,0	8,0	2,5	4,0	5,5	6,0

Factor for job site tests and displacements see annex C110

Solid sand-lime brick KS, NF, EN 771-2

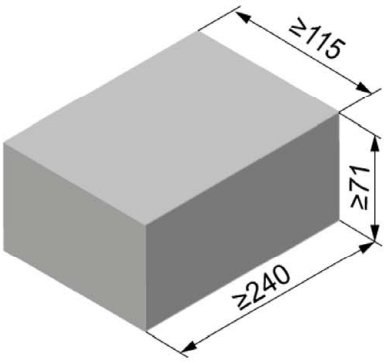

Solid sand-lime brick KS, NF, EN 771-2				
Producer				
Nominal dimensions [mm]		length L	width W	height H
		≥ 240	≥ 115	≥ 71
Density ρ [kg/dm³]		≥ 1,8		
Compressive strength f_b [N/mm²]		12 / 20 / 28		
Standard or annex		EN 771-2		

Table C14.1: Installation parameters

Anchor rod			**M6**		**M8**		**M10**		**M12**		**M16**		-		-	
Internal threaded anchor FIS E			-		-		-		-		-		**M6**	**M8**	**M10**	**M12**
													11x85		**15x85**	
Anchor rod and internal threaded anchor FIS E without perforated sleeve																
Effective anchorage depth	h_{ef}	[mm]	50	100	50	100	50	100	50	100	50	100	85		85	
							200		200		200					
Max. installation torque	T_{inst}	[Nm]	3		5		15		15		25		3	5	15	
General installation parameters																
Edge distance	c_{min}	[mm]	60													
Spacing	s_{min} ∥		80													
	s_{cr} ∥		80													
	s_{min} ⊥		3x h_{ef}													
	s_{cr} ⊥		3x h_{ef}													
Drilling method																
Hammer drilling with hard metal hammer drill																

Table C14.2: Group factors

Anchor rod			**M6**	**M8**	**M10**	**M12**	**M16**	-		-	
Internal threaded anchor FIS E			-	-	-	-	-	**M6**	**M8**	**M10**	**M12**
								11x85		**15x85**	
Group factor	$\alpha_{g,N}$ ∥	[-]	0,7								
	$\alpha_{g,V}$ ∥		1,3								
	$\alpha_{g,N}$ ⊥		2,0								
	$\alpha_{g,V}$ ⊥		2,0								

Solid sand-lime brick KS, NF, EN 771-2

Table C15.1: Characteristic resistance under tensile load

Anchor rod		M6	M8	M10	M12	M16	-	-
Internal threaded anchor FIS E		-	-	-	-	-	M6 M8: 11x85	M10 M12: 15x85
Tensile load N_{Rk} [kN] depending on the compressive strength f_b (temperature range 50/80°C)								
compressive strength f_b	use category	Effective anchorage depth h_{ef} [mm]						
		50	100	50	100	50	100	200	50	100	200	50	100	200	85	85
12N/mm²	w/w w/d	2,0	3,0	2,5	4,5	2,5	3,5	7,0	2,5	3,0	6,5	2,5	3,5	8,0	2,5	2,5
	d/d	4,0	5,5	4,0	8,0	4,0	5,5	12	4,0	4,5	12	4,5	5,5	12	4,0	4,0
20N/mm²	w/w w/d	3,0	4,5	3,5	6,5	3,5	4,5	10	3,5	4,0	9,5	4,0	5,0	11	3,5	3,5
	d/d	5,5	7,5	6,0	11	6,0	8,0	12	6,0	6,5	12	6,5	8,0	12	6,0	6,0
28N/mm²	w/w w/d	3,5	5,0	4,0	8,0	4,5	5,5	12	4,5	5,0	11	4,5	5,5	12	4,5	4,5
	d/d	6,5	9,0	7,0	12	7,0	9,0	12	7,0	7,5	12	7,5	9,5	12	7,0	7,0

Factor for temperature range 72/120°C: 0,83

Table C15.2: Characteristic resistance under shear load

Anchor rod		M6	M8	M10	M12	M16	-	-
Internal threaded anchor FIS E		-	-	-	-	-	M6 M8: 11x85	M10 M12: 15x85
Shear load V_{Rk} [kN] depending on the compressive strength f_b (temperature range 50/80°C and 72/120°C)								
compressive strength f_b	use category	Effective anchorage depth h_{ef} [mm]											
		50	100	50	100	50	≥100	50	≥100	50	≥100	85	85
12N/mm²	w/w w/d d/d	1,5	3,0	1,5	3,0	1,2	2,0	1,2	2,0	1,2	2,0	1,2	1,2
20N/mm²	w/w w/d d/d	2,5	4,0	2,5	4,0	1,5	3,0	1,5	3,0	1,5	3,0	1,5	1,5
28N/mm²	w/w w/d d/d	3,0	4,5	3,0	4,5	1,5	3,5	1,5	3,5	1,5	3,5	1,5	1,5

Factor for job site tests and displacements see annex C110

Solid sand-lime brick KS, 8DF, EN 771-2

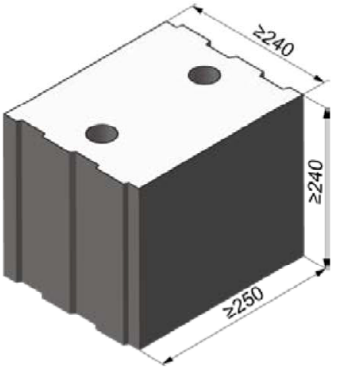

Solid sand-lime brick KS, 8DF, EN 771-2			
Producer	-		
Nominal dimensions [mm]	length L	width W	height H
	≥ 250	≥ 240	≥ 240
Density ρ [kg/dm³]	≥ 2,0		
Compressive strength f_b [N/mm²]	10 / 20 / 28		
Standard or annex	EN 771-2		

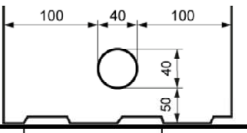

Table C16.1: Installation parameters

Anchor rod			**M6**		**M8**		**M10**		**M12**		**M16**		-		-	
Internal threaded anchor FIS E			-		-		-		-		-		**M6**	**M8**	**M10**	**M12**
													11x85		**15x85**	
Anchor rod and internal threaded anchor FIS E without perforated sleeve																
Effective anchorage depth	h_{ef}	[mm]	50	100	50	100	50	100	50	100	50	100	85			
Max. installation torque	T_{inst}	[Nm]	4		10								4		10	
Anchor rod and internal threaded anchor FIS E with perforated sleeve FIS H 16x85 K																
Effective anchorage depth	h_{ef}	[mm]	-[1]		85				-[1]				85		-[1]	
Max. installation torque	T_{inst}	[Nm]			10								4	10		
General installation parameters																
Edge distance	c_{min}	[mm]	60													
Spacing	s_{min} ∥		80													
	s_{cr} ∥		3x h_{ef}													
	s_{min} ⊥		80													
	s_{cr} ⊥		3x h_{ef}													
Drilling method																
Hammer drilling with hard metal hammer drill																

[1] No performance assessed

Table C16.2: Group factors

Anchor rods			**M6**	**M8**	**M10**	**M12**	**M16**	-		-	
Internal threaded anchor FIS E			-	-	-	-	-	**M6**	**M8**	**M10**	**M12**
								11x85		**15x85**	
Group factors	$\alpha_{g,N}$ ∥	[-]	1,5								
	$\alpha_{g,V}$ ∥		1,2								
	$\alpha_{g,N}$ ⊥		1,5								
	$\alpha_{g,V}$ ⊥		1,2								

fischer injection system FIS V for masonry

Performance
Solid sand-lime brick KS, 8DF, dimensions, installation parameters

Annex C 16

Appendix 37/ 131

Solid sand-lime brick KS, 8DF, EN 771-2

Table C17.1: Characteristic resistance under tensile load

Anchor rod	M6	M8	M10	M12	M16	-		-		M8	M10	-	
Internal threaded anchor FIS E	-	-	-	-	-	M6	M8	M10	M12	-	-	M6	M8
						11x85		15x85				11x85	
Perforated sleeve FIS H K	-	-	-	-	-	-		-		16x85			

Tensile load N_{Rk} [kN] depending on the compressive strength f_b (temperature range 50/80°C)

compressive strength f_b	use category	Effective anchorage depth h_{ef} [mm] ≥ 50					85				
10N/mm²	w/w w/d	3,0	4,0	4,5	4,5	3,5	3,0	3,5	4,5	3,0	4,5
	d/d	5,0	7,0	7,0	7,0	5,5	5,0	5,5	8,0	5,0	8,0
20N/mm²	w/w w/d	4,5	6,0	6,0	6,0	5,0	4,5	5,0	6,5	4,5	6,5
	d/d	7,5	10,0	10,0	10,0	7,5	7,5	7,5	11,0	7,5	11
28N/mm²	w/w w/d	5,0	8,0	8,5	8,5	7,0	5,0	7,0	8,5	5,0	8,5
	d/d	8,5	12,0	12,0	12,0	11,0	8,5	11,0	12,0	8,5	12

Factor for temperature range 72/120°C: 0,83

Table C17.2: Characteristic resistance under shear load

Anchor rod	M6	M8	M10	M12	M16	-		-		M8	M10	-	
Internal threaded anchor FIS E	-	-	-	-	-	M6	M8	M10	M12	-	-	M6	M8
						11x85		15x85				11x85	
Perforated sleeve FIS H K	-	-	-	-	-	-		-		16x85			

Shear load V_{Rk} [kN] depending on the compressive strength f_b (temperature range 50/80°C and 72/120°C)

compressive strength f_b	use category	Effective anchorage depth h_{ef} [mm] ≥ 50			85				
10N/mm²	w/w w/d d/d	2,5	4,5		2,5	4,5	4,5	2,5	4,5
20N/mm²	w/w w/d d/d	4,0	6,5		4,0	6,5	6,5	4,0	6,5
28N/mm²	w/w w/d d/d	5,0	9,0		5,0	9,0	9,0	5,0	9,0

Factor for job site tests and displacements see annex C110

Solid sand-lime brick KS, EN 771-2

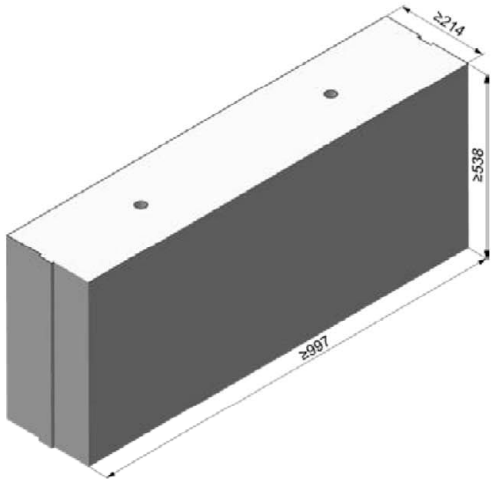

Solid sand-lime brick KS, EN 771-2				
Producer		e.g. Calduran		
Nominal dimensions [mm]		length L	width W	height H
		≥ 997	≥ 214	≥ 538
Density ρ	[kg/dm³]	1,8		2,2
Compressive strength f_b	[N/mm²]	10 / 20		36
Standard or annex		EN 771-2		

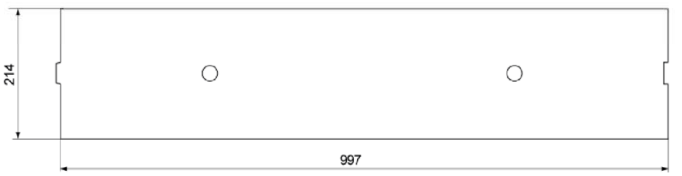

Table C18.1: Installation parameters

Anchor rod			**M6**		**M8**		**M10**		**M12**		**M16**		**-**		**-**	
Internal threaded anchor FIS E			**-**		**-**		**-**		**-**		**-**		**M6**	**M8**	**M10**	**M12**
													11x85		**15x85**	
Anchor rod and internal threaded anchor FIS E without perforated sleeve																
Effective anchorage depth	h_{ef}	[mm]	50	100	50	100	50	100	50	100	50	100	85			
Max. installation torque	T_{inst}	[Nm]	4		10								4		10	
General installation parameters																
Edge distance	c_{min}	[mm]	75													
Spacing	s_{cr} ∥ = s_{min} ∥	[mm]	3x h_{ef}													
	s_{cr} ⊥ = s_{min} ⊥	[mm]	3x h_{ef}													
Drilling method																
Hammer drilling with hard metal hammer drill																

Table C18.2: Group factors

Anchor rod			**M6**	**M8**	**M10**	**M12**	**M16**	**-**		**-**	
Internal threaded anchor FIS E			**-**	**-**	**-**	**-**	**-**	**M6**	**M8**	**M10**	**M12**
								11x85		**15x85**	
Group factors	$\alpha_{g,N}$ ∥	[-]	2								
	$\alpha_{g,V}$ ∥	[-]	2								
	$\alpha_{g,N}$ ⊥	[-]	2								
	$\alpha_{g,V}$ ⊥	[-]	2								

Solid sand-lime brick KS, EN 771-2

Table C19.1: Characteristic resistance under tensile load

Anchor rod		M6	M8	M10	M12	M16	-	-
Internal threaded anchor FIS E		-	-	-	-	-	M6 | M8: 11x85	M10 | M12: 15x85
Tensile load N_{Rk} [kN] depending on the compressive strength f_b (temperature range 50/80°C)								
compressive strength f_b	use category	Effective anchorage depth h_{ef} [mm]						
		50	100	50	100	50	100	50	100	50	100	85
10N/mm²	w/w | w/d	4,0		4,0	7,0	5,0	6,0	5,0	6,0	5,5	7,5	5,5
	d/d	7,0		7,0	12,0	8,0	9,5	8,0	10,0	9,0	11,5	9,0
20N/mm²	w/w | w/d	5,5		6,0	10,0	7,0	8,5	7,0	9,0	8,0	11,0	8,0
	d/d	8,5		10,5	12,0	11,5	12,0	11,0	12,0	12,0	12,0	12,0
36N/mm²	w/w | w/d	4,5		8,0	12,0	11,5	12,0	12,0	12,0	12,0	12,0	12,0
	d/d	8,0		12,0	12,0	12,0	12,0	12,0	12,0	12,0	12,0	12,0

Factor for temperature range 72/120°C: 0,83

Table C19.2: Characteristic resistance under shear load

Anchor rod		M6	M8	M10	M12	M16	-	-
Internal threaded anchor FIS E		-	-	-	-	-	M6 | M8: 11x85	M10 | M12: 15x85
Shear load V_{Rk} [kN] depending on the compressive strength f_b (temperature range 50/80°C and 72/120°C)								
compressive strength f_b	use category	Effective anchorage depth h_{ef} [mm]						
		≥ 50					85	
10N/mm²	w/w | w/d | d/d	3,0	5,0	5,5	4,0	4,0	3,0	5,0	5,5	4,0
20N/mm²	w/w | w/d | d/d	4,5	7,0	7,5	6,0	6,0	4,5	7,0	7,5	6,0
36N/mm²	w/w | w/d | d/d	4,5	9,0	11,0	12,0	12,0	4,5	9,0	11,0	12,0

Factor for job site tests and displacements see annex C110

Perforated sand-lime brick KSL, 3DF, EN 771-2

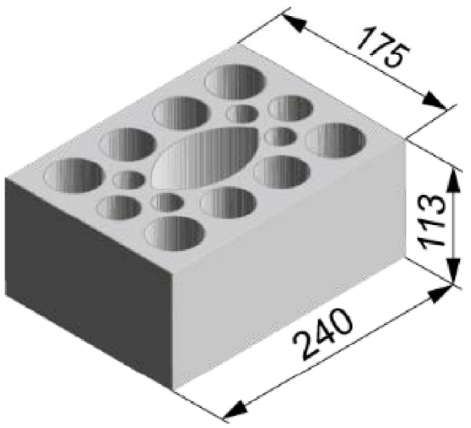

Perforated sand-lime brick KSL, 3DF, EN 771-2			
Producer	e.g. KS Wemding		
Nominal dimensions [mm]	length L	width W	height H
	240	175	113
Density ρ [kg/dm³]	≥ 1,4		
Compressive strength f_b [N/mm²]	8 / 10 / 12 / 16 / 20		
Standard or annex	EN 771-2		

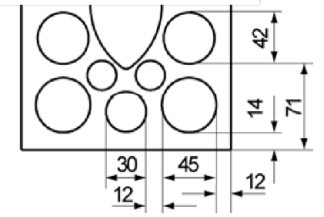

Tabelle C20.1: Installation parameters
(Pre-positioned anchorage with perforated sleeve FIS H K)

Anchor rod	**M6**	**M8**	**M6**	**M8**	**-**	**M8**	**M10**	**M8**	**M10**	**-**	**M12**	**M16**	**M12**	**M16**
Internal threaded anchor FIS E	**-**		**-**		**M6** / **11x85**	**M8** / **11x85**	**-**	**-**		**M10** / **15x85**	**M12** / **15x85**	**-**	**-**	
Perforated sleeve FIS H K	**12x50**		**12x85**		**16x85**			**16x130**		**20x85**			**20x130**	
Anchor rod and internal threaded anchor FIS E with perforated sleeve FIS H K														
Max. installation torque T_{inst} [Nm]	2													
General installation parameters														
Edge distance c_{min} [mm]	60				80									
Spacing s_{min} ∥ [mm]	100													
Spacing s_{cr} ∥ [mm]	240													
Spacing s_{min} ⊥ [mm]	115													
Spacing s_{cr} ⊥ [mm]	115													
Drilling method														
Hammer drilling with hard metal hammer drill														

Table C20.2: Group factors

Anchor rod	**M6**	**M8**	**M6**	**M8**	**-**	**M8**	**M10**	**M8**	**M10**	**-**	**M12**	**M16**	**M12**	**M16**
Internal threaded anchor FIS E	**-**		**-**		**M6** / **11x85**	**M8** / **11x85**	**-**	**-**		**M10** / **15x85**	**M12** / **15x85**	**-**	**-**	
Perforated sleeve FIS H K	**12x50**		**12x85**		**16x85**			**16x130**		**20x85**			**20x130**	
Group factors $\alpha_{g,N}$ ∥ = $\alpha_{g,V}$ ∥ [-]	1,5													
Group factors $\alpha_{g,N}$ ⊥ = $\alpha_{g,V}$ ⊥ [-]	2,0													

Perforated sand-lime brick KSL, 3DF, EN 771-2

Table C21.1: Installation parameters
(Push through anchorage with perforated sleeve FIS H K)

Anchor rod			**M10**	**M12**	**M16**
Perforated sleeve FIS H K			**18x130/200**		**22x130/200**
Anchor rod with perforated sleeve FIS H K					
Max. installation torque	T_{inst}	[Nm]	2		
General installation parameters					
Edge distance	c_{min}	[mm]	80		
Spacing	s_{min} ∥		100		
	s_{cr} ∥		240		
	s_{min} ⊥		115		
	s_{cr} ⊥		115		
Drilling method					
Hammer drilling with hard metal hammer drill					

Table C21.2: Group factors

Anchor rod			**M10**	**M12**	**M16**
Perforated sleeve FIS H K			**18x130/200**		**22x130/200**
Group factors	$\alpha_{g,N}$ ∥	[-]	1,5		
	$\alpha_{g,V}$ ∥				
	$\alpha_{g,N}$ ⊥		2,0		
	$\alpha_{g,V}$ ⊥				

Perforated sand-lime brick KSL, 3DF, EN 771-2

Table C22.1: Characteristic resistance under tensile load (Pre-positioned anchorage)

Anchor rod		**M6**	**M8**	**M6**	**M8**	**-**		**M8**	**M10**	**M8**	**M10**	**-**		**M12**	**M16**	**M12**	**M16**
Internal threaded anchor FIS E		**-**		**-**		**M6**	**M8**	**-**		**-**		**M10**	**M12**	**-**		**-**	
						11x85						**15x85**					
Perforated sleeve FIS H K		**12x50**		**12x85**		**16x85**				**16x130**		**20x85**				**20x130**	
Tensile load N_{Rk} [kN] depending on the compressive strength f_b (temperature range 50/80°C)																	
compressive strength f_b	use category																
8 N/mm²	w/w w/d	1,5				2,0				2,0		2,0				2,0	
	d/d	1,5				2,0				2,5		2,5				2,5	
10 N/mm²	w/w w/d	2,0				2,0				2,5		2,5				2,5	
	d/d	2,0				2,5				3,0		3,0				3,0	
12 N/mm²	w/w w/d	2,5				2,5				3,0		3,0				3,0	
	d/d	2,5				3,0				3,5		3,5				3,5	
16 N/mm²	w/w w/d	3,0				3,5				4,5		4,5				4,5	
	d/d	3,5				4,0				4,5		4,5				4,5	
20 N/mm²	w/w w/d	4,0				4,5				5,5		5,5				5,5	
	d/d	4,5				5,0				6,0		6,0				6,0	

Table C22.2: Characteristic resistance under tensile load (Push through anchorage)

Anchor rod		**M10**	**M12**	**M16**
Perforated sleeve FIS H K		**18x130/200**		**22x130/200**
Tensile load N_{Rk} [kN] depending on the compressive strength f_b (temperature range 50/80°C)				
compressive strength f_b	use category			
8 N/mm²	w/w w/d	2,0		
	d/d	2,5		
10 N/mm²	w/w w/d	2,5		
	d/d	3,0		
12 N/mm²	w/w w/d	3,0		
	d/d	3,5		
16 N/mm²	w/w w/d	4,5		
	d/d	4,5		
20 N/mm²	w/w w/d	5,5		
	d/d	6,0		

Factor for job site tests and displacements see annex C110

Factor for temperature range 72/120°C: 0,83

Perforated sand-lime brick KSL, 3DF, EN 771-2

Table C23.1: Characteristic resistance under shear load (Pre-positioned anchorage)

Anchor rod		**M6**	**M8**	**M6**	**M8**	**-**		**M8**	**M10**	**M8**	**M10**	**-**		**M12**	**M16**	**M12**	**M16**
Internal threaded anchor FIS E		**-**		**-**		**M6**	**M8**	**-**		**-**		**M10**	**M12**	**-**		**-**	
						11x85						**15x85**					
Perforated sleeve FIS H K		**12x50**		**12x85**		**16x85**				**16x130**		**20x85**				**20x130**	
Shear load V_{Rk} [kN] depending on the compressive strength f_b (temperature range 50/80°C and 72/120°C)																	
compressive strength f_b	use category																
8 N/mm²	w/w w/d d/d	1,5				3,0								2,5		3,0	2,5
10 N/mm²	w/w w/d d/d	2,0				3,5											
12 N/mm²	w/w w/d d/d	2,5				4,5								4,0		4,5	4,0
16 N/mm²	w/w w/d d/d	3,0	3,5	3,0	3,5	3,0		6,0						5,5		6,0	5,5
20 N/mm²	w/w w/d d/d	4,0	4,5	4,0	4,5	4,0		7,5						6,5		7,5	6,5

Table C23.2: Characteristic resistance under shear load (Push through anchorage)

Anchor rod		**M10**	**M12**	**M16**
Perforated sleeve FIS H K		**18x130/200**		**22x130/200**
Shear load V_{Rk} [kN] depending on the compressive strength f_b (temperature range 50/80°C and 72/120°C)				
compressive strength f_b	use category			
8 N/mm²	w/w w/d d/d	3,0		2,5
10 N/mm²	w/w w/d d/d	3,5		3,5
12 N/mm²	w/w w/d d/d	4,5		4,0
16 N/mm²	w/w w/d d/d	6,0		5,5
20 N/mm²	w/w w/d d/d	7,5		6,5

Factor for job site tests and displacements see annex C110

Vertical perforated brick HLz, EN 771-1

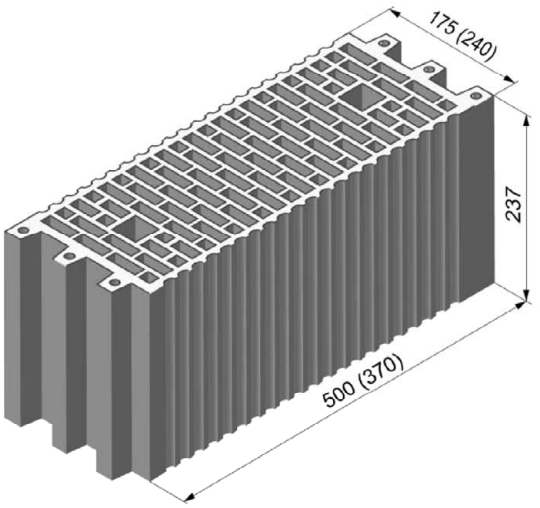

Vertical perforated brick HLz, EN 771-1			
Producer	e.g. Wienerberger, Poroton		
Nominal dimensions [mm]	length L	width W	height H
	500	175	237
	370	240	237
Density ρ [kg/dm³]	≥ 1,0		
Compressive strength f_b [N/mm²]	4 / 6 / 8 / 10 / 12		
Standard or annex	EN 771-1		

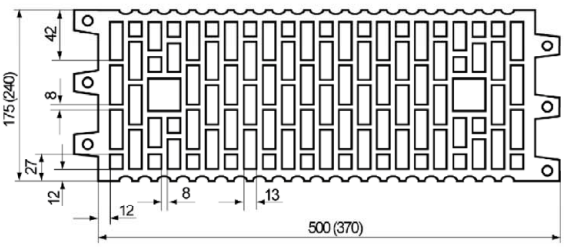

Table C24.1: Installation parameters

Anchor rod	**M6**	**M8**	**M6**	**M8**	**-**		**M8**	**M10**	**M8**	**M10**	**-**		**M12**	**M16**	**M12**	**M16**
Internal threaded anchor FIS E	**-**		**-**		**M6**	**M8**	**-**		**-**		**M10**	**M12**	**-**		**-**	
					11x85						**15x85**					
Perforated sleeve FIS H K	**12x50**		**12x85**		**16x85**				**16x130**		**20x85**				**20x130**	
Anchor rod and internal threaded anchor FIS E with perforated sleeve FIS H K																
Max. installation torque T_{inst} [Nm]	2															
General installation parameters																
Edge distance c_{min} [mm]	100															
Spacing s_{min} ∥ [mm]	100															
Spacing s_{cr} ∥ [mm]	500 (370)															
Spacing s_{min} ⊥ [mm]	100															
Spacing s_{cr} ⊥ [mm]	240															
Drilling method																
Hammer drilling with hard metal hammer drill																

Table C24.2: Group factors

Anchor rod	**M6**	**M8**	**M6**	**M8**	**-**		**M8**	**M10**	**M8**	**M10**	**-**		**M12**	**M16**	**M12**	**M16**
Internal threaded anchor FIS E	**-**		**-**		**M6**	**M8**	**-**		**-**		**M10**	**M12**	**-**		**-**	
					11x85						**15x85**					
Perforated sleeve FIS H K	**12x50**		**12x85**		**16x85**				**16x130**		**20x85**				**20x130**	
Group factors $\frac{\alpha_{g,N} \parallel = \alpha_{g,V} \parallel}{\alpha_{g,N} \perp = \alpha_{g,V} \perp}$ [-]	1															

fischer injection system FIS V for masonry

Performance
Vertical perforated brick HLz, dimensions, installation parameters

Annex C 24

Appendix 45/ 131

Vertical perforated brick HLz, EN 771-1

Table C25.1: Characteristic resistance under tensile load

Anchor rod		**M6**	**M8**	**M6**	**M8**	**-**		**M8**	**M10**	**M8**	**M10**	**-**		**M12**	**M16**	**M12**	**M16**
Internal threaded anchor FIS E		**-**		**-**		**M6**	**M8**	**-**		**-**		**M10**	**M12**	**-**		**-**	
						11x85						**15x85**					
Perforated sleeve FIS H K		**12x50**		**12x85**		**16x85**				**16x130**		**20x85**				**20x130**	
Tensile load N_{Rk} [kN] depending on the compressive strength f_b (temperature range 50/80°C)																	
compressive strength f_b	use category																
4 N/mm²	w/w w/d	0,3				0,9										1,2	
	d/d	0,4				0,9										1,2	
6 N/mm²	w/w w/d	0,5				1,5										2,0	
	d/d	0,6				1,5										2,0	
8 N/mm²	w/w w/d	0,75				2,0										2,5	
	d/d	0,75				2,0										2,5	
10 N/mm²	w/w w/d	0,9				2,5										3,0	
	d/d	0,9				2,5										3,5	
12 N/mm²	w/w w/d	0,9				3,0										3,5	
	d/d	1,2				3,0										4,0	

Factor for temperature range 72/120°C: 0,83

Table C25.2: Characteristic resistance under shear load

Anchor rod		**M6**	**M8**	**M6**	**M8**	**-**		**M8**	**M10**	**M8**	**M10**	**-**		**M12**	**M16**	**M12**	**M16**
Internal threaded anchor FIS E		**-**		**-**		**M6**	**M8**	**-**		**-**		**M10**	**M12**	**-**		**-**	
						11x85						**15x85**					
Perforated sleeve FIS H K		**12x50**		**12x85**		**16x85**				**16x130**		**20x85**				**20x130**	
Shear load V_{Rk} [kN] depending on the compressive strength f_b (temperature range 50/80°C and 72/120°C)																	
compressive strength f_b	use category																
4 N/mm²	w/w w/d d/d	0,5								0,6		0,5				0,6	
6 N/mm²	w/w w/d d/d	0,75								0,9		0,75				0,9	
8 N/mm²	w/w w/d d/d	0,9								1,2		0,9				1,2	
10 N/mm²	w/w w/d d/d	1,2								1,5		1,2				1,5	
12 N/mm²	w/w w/d d/d	1,5								2,0		1,5				2,0	

Factor for job site tests and displacements see annex C110

fischer injection system FIS V for masonry

Performance
Vertical perforated brick HLz, Characteristic resistance under tensile and shear load

Annex C 25

Appendix 46/ 131

Vertical perforated brick HLz, 2DF, EN 771-1

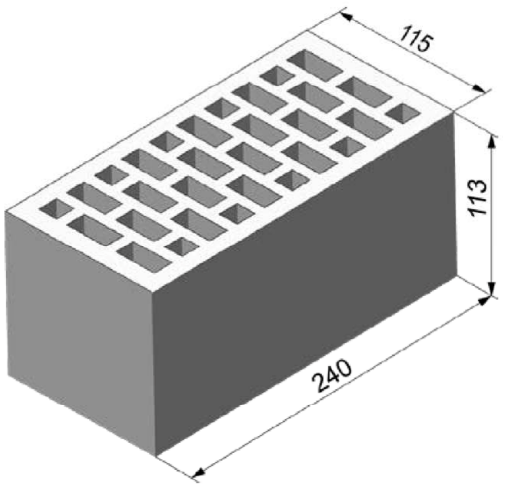

Vertical perforated brick HLz, 2DF, EN 771-1				
Producer		e.g. Wienerberger		
Nominal dimensions [mm]		length L	width W	height H
		240	115	113
Density ρ [kg/dm³]		≥ 1,4		
Compressive strength f_b [N/mm²]		6 / 10 / 16 / 20 / 28		
Standard or annex		EN 771-1		

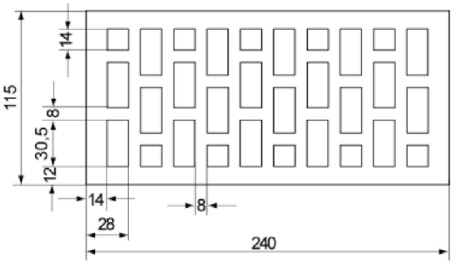

Table C26.1: Installation parameters

Anchor rod		**M6**	**M8**	**M6**	**M8**	**-**		**M8**	**M10**	**-**		**M12**	**M16**
Internal threaded anchor FIS E		**-**		**-**		**M6**	**M8**	**-**		**M10**	**M12**	**-**	
						11x85				**15x85**			
Perforated sleeve FIS H K		**12x50**		**12x85**		**16x85**				**20x85**			
Anchor rod and internal threaded anchor FIS E with perforated sleeve FIS H K													
Max. installation torque	T_{inst}	[Nm]	2										
General installation parameters													
Edge distance	c_{min}	[mm]	80										
Spacing	s_{cr} II = s_{min} II	[mm]	240										
	s_{cr} ⊥ = s_{min} ⊥	[mm]	115										
Drilling method													
Hammer drilling with hard metal hammer drill													

Table C26.2: Group factors

Anchor rod		**M6**	**M8**	**M6**	**M8**	**-**		**M8**	**M10**	**-**		**M12**	**M16**
Internal threaded anchor FIS E		**-**		**-**		**M6**	**M8**	**-**		**M10**	**M12**	**-**	
						11x85				**15x85**			
Perforated sleeve FIS H K		**12x50**		**12x85**		**16x85**				**20x85**			
Group factors	$\alpha_{g,N}$ II	[-]	2										
	$\alpha_{g,V}$ II												
	$\alpha_{g,N}$ ⊥												
	$\alpha_{g,V}$ ⊥												

Vertical perforated brick HLz, 2DF, EN 771-1

Table C27.1: Characteristic resistance under tensile load

Anchor rod		**M6**	**M8**	**M6**	**M8**	**-**	**M8**	**M10**	**-**	**M12**	**M16**
Internal threaded anchor FIS E		**-**		**-**		**M6** / **11x85**	**M8** / **11x85**	**-**	**M10** / **15x85**	**M12** / **15x85**	**-**
Perforated sleeve FIS H K		**12x50**		**12x85**		**16x85**			**20x85**		
Tensile load N_{Rk} [kN] depending on the compressive strength f_b (temperature range 50/80°C)											
compressive strength f_b	use category										
6 N/mm²	w/w w/d	0,75		0,9		0,75			0,9		
	d/d	0,75		1,2		0,75			0,9		
10 N/mm²	w/w w/d	1,2		1,5		1,2			1,5		
	d/d	1,2		2,0		1,2			1,5		
16 N/mm²	w/w w/d	2,0		2,5		2,0			2,0		
	d/d	2,0		3,0		2,0			2,5		
20 N/mm²	w/w w/d	2,5		3,5		2,5			3,0		
	d/d	2,5		4,0		2,5			3,0		
28 N/mm²	w/w w/d	3,0		5,0		3,5			4,0		
	d/d	3,5		5,5		3,5			4,5		

Factor for temperature range 72/120°C: 0,83

Table C27.2: Characteristic resistance under shear load

Anchor rod		**M6**	**M8**	**M6**	**M8**	**-**	**M8**	**M10**	**-**	**M12**	**M16**
Internal threaded anchor FIS E		**-**		**-**		**M6** / **11x85**	**M8** / **11x85**	**-**	**M10** / **15x85**	**M12** / **15x85**	**-**
Perforated sleeve FIS H K		**12x50**		**12x85**		**16x85**			**20x85**		
Shear load V_{Rk} [kN] depending on the compressive strength f_b (temperature range 50/80°C and 72/120°C)											
compressive strength f_b	use category										
6 N/mm²	w/w w/d d/d	1,2	1,5	1,2	2,0	1,2	1,5		2,5		
10 N/mm²	w/w w/d d/d	2,0	2,5	2,0	4,0	2,0	2,5		4,5		
16 N/mm²	w/w w/d d/d	3,0	3,5	3,0	6,0	3,0	3,5		7,0		
20 N/mm²	w/w w/d d/d	4,0	4,5	4,0	7,5	4,0	4,5		8,5		
28 N/mm²	w/w w/d d/d	5,0	6,5	5,0	9,5	5,0	6,5		12,0		

Factor for job site tests and displacements see annex C110

Vertical perforated brick HLz, U8, EN 771-1

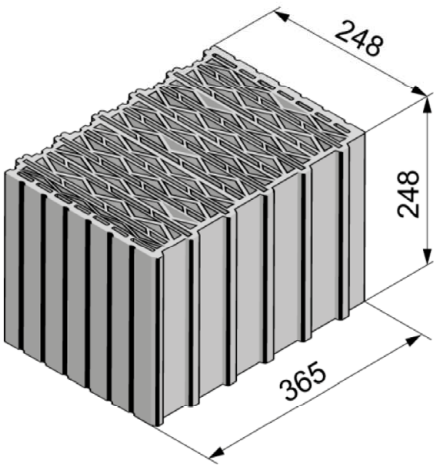

Vertical perforated brick HLz, U8, EN 771-1			
Producer	-		
Nominal dimensions [mm]	length L	width W	height H
	248	365	248
Density ρ [kg/dm³]	0,6		
Compressive strength f_b [N/mm²]	4 / 6 / 8		
Standard or annex	EN 771-1		

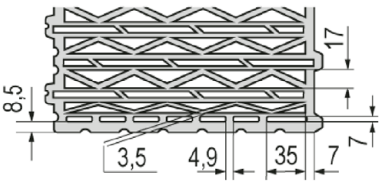

Table C28.1: Installation parameters
(Pre-positioned anchorage with perforated sleeve FIS H K)

Anchor rod	**M6**	**M8**	**M6**	**M8**	**-**		**M8**	**M10**	**M8**	**M10**	**-**		**M12**	**M16**	**M12**	**M16**	**M12**	**M16**
Internal threaded anchor FIS E	**-**		**-**		**M6**	**M8**	**-**		**-**		**M10**	**M12**	**-**		**-**		**-**	
					11x85						**15x85**							
Perforated sleeve FIS H K	**12x50**		**12x85**		**16x85**				**16x130**		**20x85**				**20x130**		**20x200**	
Anchor rod and internal threaded anchor FIS E with perforated sleeve FIS H K																		
Max. installation torque T_{inst} [Nm]	3	5	3	5	3	5	5											
General installation parameters																		
Edge distance c_{min} [mm]	60																	
Spacing s_{min} ∥ [mm]	80																	
Spacing s_{cr} ∥ [mm]	250																	
Spacing s_{min} ⊥ [mm]	80																	
Spacing s_{cr} ⊥ [mm]	250																	
Drilling method																		
Rotary drilling with carbide drill																		

Table C28.2: Group factors

Anchor rod	**M6**	**M8**	**M6**	**M8**	**-**		**M8**	**M10**	**M8**	**M10**	**-**		**M12**	**M16**	**M12**	**M16**	**M12**	**M16**
Internal threaded anchor FIS E	**-**		**-**		**M6**	**M8**	**-**		**-**		**M10**	**M12**	**-**				**-**	
					11x85						**15x85**							
Perforated sleeve FIS H K	**12x50**		**12x85**		**16x85**				**16x130**		**20x85**				**20x130**		**20x200**	
Group factors $\alpha_{g,N}$ ∥ [-]	1,3																	
Group factors $\alpha_{g,V}$ ∥ [-]	1,2																	
Group factors $\alpha_{g,N}$ ⊥ [-]	1,3																	
Group factors $\alpha_{g,V}$ ⊥ [-]	1,0																	

Vertical perforated brick HLz, U8, EN 771-1

Table C29.1: Installation parameters
(Push through anchorage with perforated sleeve FIS H K)

Anchor rod			**M10**	**M12**	**M16**
Perforated sleeve FIS H K			**18x130/200**		**22x130/200**
Anchor rod with perforated sleeve FIS H K					
Max. installation torque	T_{inst}	[Nm]	5		
General installation parameters					
Edge distance	c_{min}	[mm]	60		
Spacing	s_{min} ∥		80		
	s_{cr} ∥		250		
	s_{min} ⊥		80		
	s_{cr} ⊥		250		
Drilling method					
Rotary drilling with carbide drill					

Table C29.2: Group factors

Anchor rod			**M10**	**M12**	**M16**
Perforated sleeve FIS H K			**18x130/200**		**22x130/200**
Group factors	$\alpha_{g,N}$ ∥	[-]	1,3		
	$\alpha_{g,V}$ ∥		1,2		
	$\alpha_{g,N}$ ⊥		1,3		
	$\alpha_{g,V}$ ⊥		1,0		

Vertical perforated brick HLz, U8, EN 771-1

Table C30.1: Characteristic resistance under tensile load (Pre-positioned anchorage)

Anchor rod	**M6**	**M8**	**M6**	**M8**	**-**	**M8**	**M10**	**M8**	**M10**	**-**	**M12**	**M16**	**M12**	**M16**	**M12**	**M16**
Internal threaded anchor FIS E	**-**		**-**		**M6 M8** **11x85**	**-**		**-**		**M10 M12** **15x85**	**-**		**-**		**-**	
Perforated sleeve FIS H K	**12x50**		**12x85**		**16x85**			**16x130**		**20x85**			**20x130**		**20x200**	
Tensile load N_{Rk} [kN] depending on the compressive strength f_b (temperature range 50/80°C)																
compressive strength f_b	use category															
4 N/mm²	w/w	w/d	1,2		1,2											
	d/d		1,2		1,5											
6 N/mm²	w/w	w/d	1,5		1,5											
	d/d		1,5		1,5											
8 N/mm²	w/w	w/d	1,5		2,0											
	d/d		2,0		2,0											

Table C30.2: Characteristic resistance under tensile load (Push through anchorage)

Anchor rod	**M10**	**M12**	**M16**
Perforated sleeve FIS H K	**18x130/200**		**22x130/200**
Tensile load N_{Rk} [kN] depending on the compressive strength f_b (temperature range 50/80°C)			
compressive strength f_b	use category		
4 N/mm²	w/w w/d	1,2	
	d/d	1,5	
6 N/mm²	w/w w/d	1,5	
	d/d	1,5	
8 N/mm²	w/w w/d	2,0	
	d/d	2,0	

Factor for job site tests and displacements see annex C110

Factor for temperature range 72/120°C: 0,83

Vertical perforated brick HLz, U8, EN 771-1

Table C31.1: Characteristic resistance under shear load (Pre-positioned anchorage)

Anchor rod	**M6**	**M8**	**M6**	**M8**	**-**	**M8**	**M10**	**M8**	**M10**	**-**	**M12**	**M16**	**M12**	**M16**	**M12**	**M16**
Internal threaded anchor FIS E	**-**		**-**		**M6** / **11x85** **M8**	**-**		**-**		**M10** / **15x85** **M12**	**-**		**-**		**-**	
Perforated sleeve FIS H K	**12x50**		**12x85**		**16x85**			**16x130**		**20x85**			**20x130**		**20x200**	
Shear load V_{Rk} [kN] depending on the compressive strength f_b (temperature range 50/80°C and 72/120°C)																
compressive strength f_b	use category															
4 N/mm²	w/w, w/d, d/d				1,2											
6 N/mm²	w/w, w/d, d/d				1,5											
8 N/mm²	w/w, w/d, d/d				1,5											

Table C31.2: Characteristic resistance under shear load (Push through anchorage)

Anchor rod	**M10**	**M12**	**M16**
Perforated sleeve FIS H K	**18x130/200**		**22x130/200**
Shear load V_{Rk} [kN] depending on the compressive strength f_b (temperature range 50/80°C and 72/120°C)			
compressive strength f_b	use category		
4 N/mm²	w/w, w/d, d/d	1,2	
6 N/mm²	w/w, w/d, d/d	1,5	
8 N/mm²	w/w, w/d, d/d	1,5	

Factor for job site tests and displacements see annex C108

Vertical perforated brick HLz, T10, T11, EN 771-1

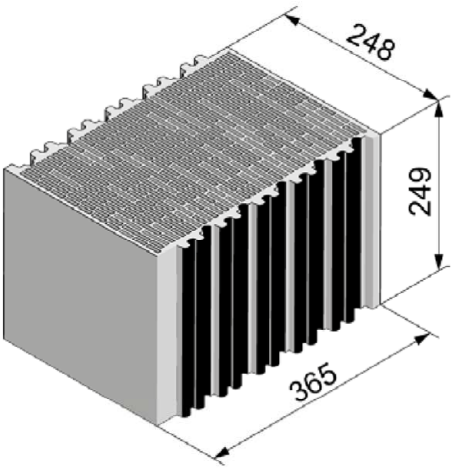

Vertical perforated brick HLz, T10, T11, EN 771-1			
Producer	-		
Nominal dimensions [mm]	length L	width W	height H
	248	365	249
Density ρ [kg/dm³]	0,7		
Compressive strength f_b [N/mm²]	8 / 10 / 12		
Standard or annex	EN 771-1		

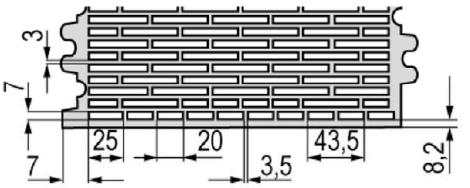

Table C32.1: Installation parameters
(Pre-positioned anchorage with perforated sleeve FIS H K)

Anchor rod	**M6**	**M8**	**M6**	**M8**	**-**		**M8**	**M10**	**M8**	**M10**	**-**		**M12**	**M16**	**M12**	**M16**	**M12**	**M16**
Internal threaded anchor FIS E	**-**		**-**		**M6**	**M8**	**-**		**-**		**M10**	**M12**	**-**		**-**		**-**	
					11x85						**15x85**							
Perforated sleeve FIS H K	**12x50**		**12x85**		**16x85**				**16x130**		**20x85**				**20x130**		**20x200**	
Anchor rod and internal threaded anchor FIS E with perforated sleeve FIS H K																		
Max. installation torque T_{inst} [Nm]	3							5	3		5							
General installation parameters																		
Edge distance c_{min} [mm]	60																	
Spacing s_{min} ∥ [mm]	80																	
Spacing s_{cr} ∥ [mm]	250																	
Spacing s_{min} ⊥ [mm]	80																	
Spacing s_{cr} ⊥ [mm]	250																	
Drilling method																		
Rotary drilling with carbide drill																		

Table C32.2: Group factors

Anchor rod	**M6**	**M8**	**M6**	**M8**	**-**		**M8**	**M10**	**M8**	**M10**	**-**		**M12**	**M16**	**M12**	**M16**	**M12**	**M16**
Internal threaded anchor FIS E	**-**		**-**		**M6**	**M8**	**-**		**-**		**M10**	**M12**	**-**		**-**		**-**	
					11x85						**15x85**							
Perforated sleeve FIS H K	**12x50**		**12x85**		**16x85**				**16x130**		**20x85**				**20x130**		**20x200**	
Group factors $\alpha_{g,N}$ ∥ [-]	1,7																	
Group factors $\alpha_{g,V}$ ∥ [-]	0,5																	
Group factors $\alpha_{g,N}$ ⊥ [-]	1,3																	
Group factors $\alpha_{g,V}$ ⊥ [-]	0,5																	

Vertical perforated brick HLz, T10, T11, EN 771-1

Table C33.1: Installation parameters
(Push through anchorage with perforated sleeve FIS H K)

Anchor rod			**M10**	**M12**	**M16**
Perforated sleeve FIS H K			**18x130/200**		**22x130/200**
Anchor rod with perforated sleeve FIS H K					
Max. installation torque	T_{inst}	[Nm]	5		
General installation parameters					
Edge distance	c_{min}	[mm]	60		
Spacing	s_{min} ∥		80		
	s_{cr} ∥		250		
	s_{min} ⊥		80		
	s_{cr} ⊥		250		
Drilling method					
Rotary drilling with carbide drill					

Table C33.2: Group factors

Anchor rod			**M10**	**M12**	**M16**
Perforated sleeve FIS H K			**18x130/200**		**22x130/200**
Group factors	$\alpha_{g,N}$ ∥	[-]	1,7		
	$\alpha_{g,V}$ ∥		0,5		
	$\alpha_{g,N}$ ⊥		1,3		
	$\alpha_{g,V}$ ⊥		0,5		

Vertical perforated brick HLz, T10, T11, EN 771-1

Table C34.1: Characteristic resistance under tensile load (Pre-positioned anchorage)

Anchor rod		**M6**	**M8**	**M6**	**M8**	**-**	**M8**	**M10**	**M8**	**M10**	**-**	**M12**	**M16**	**M12**	**M16**	**M12**	**M16**
Internal threaded anchor FIS E		**-**		**-**		**M6** / **11x85**	**M8** / **11x85**	**-**	**-**		**M10** / **15x85**	**M12** / **15x85**	**-**	**-**		**-**	
Perforated sleeve FIS H K		**12x50**		**12x85**		**16x85**			**16x130**		**20x85**			**20x130**		**20x200**	
Tensile load N_{Rk} [kN] depending on the compressive strength f_b (temperature range 50/80°C)																	
compressive strength f_b	use category																
8 N/mm²	w/w w/d	1,5		1,5													
	d/d	1,5		2,0													
10 N/mm²	w/w w/d	1,5		2,0													
	d/d	2,0		2,0													
12 N/mm²	w/w w/d	2,0		2,0													
	d/d	2,0		2,5													

Table C34.2: Characteristic resistance under tensile load (Push through anchorage)

Anchor rod		**M10**	**M12**	**M16**
Perforated sleeve FIS H K		**18x130/200**		**22x130/200**
Tensile load N_{Rk} [kN] depending on the compressive strength f_b (temperature range 50/80°C)				
compressive strength f_b	use category			
8 N/mm²	w/w w/d	1,5		1,5
	d/d	2,0		2,0
10 N/mm²	w/w w/d	2,0		2,0
	d/d	2,0		2,0
12 N/mm²	w/w w/d	2,0		2,0
	d/d	2,5		2,5

Factor for job site tests and displacements see annex C110

Factor for temperature range 72/120°C: 0,83

Vertical perforated brick HLz, T10, T11, EN 771-1

Table C35.1: Characteristic resistance under shear load (Pre-positioned anchorage)

Anchor rod	**M6**	**M8**	**M6**	**M8**	**-**	**M8**	**M10**	**M8**	**M10**	**-**	**M12**	**M16**	**M12**	**M16**	**M12**	**M16**
Internal threaded anchor FIS E	**-**		**-**		**M6** / **11x85**	**M8** / **11x85**	**-**	**-**		**M10** / **15x85**	**M12** / **15x85**	**-**		**-**		**-**
Perforated sleeve FIS H K	**12x50**		**12x85**		**16x85**			**16x130**		**20x85**			**20x130**		**20x200**	
Shear load V_{Rk} [kN] depending on the compressive strength f_b (temperature range 50/80°C and 72/120°C)																
compressive strength f_b	use category															
8 N/mm²	w/w, w/d, d/d		0,9		1,5					2,0						
10 N/mm²	w/w, w/d, d/d		0,9		1,5					2,0						
12 N/mm²	w/w, w/d, d/d		1,2		2,0					2,0						

Table C35.2: Characteristic resistance under shear load (Push through anchorage)

Anchor rod	**M10**	**M12**	**M16**
Perforated sleeve FIS H K	**18x130/200**		**22x130/200**
Shear load V_{Rk} [kN] depending on the compressive strength f_b (temperature range 50/80°C and 72/120°C)			
compressive strength f_b	use category		
8 N/mm²	w/w, w/d, d/d	1,5	2,0
10 N/mm²	w/w, w/d, d/d	1,5	2,0
12 N/mm²	w/w, w/d, d/d	2,0	2,0

Factor for job site tests and displacements see annex C110

Vertical perforated brick HLz, T7 PF, filled with perlit, EN 771-1

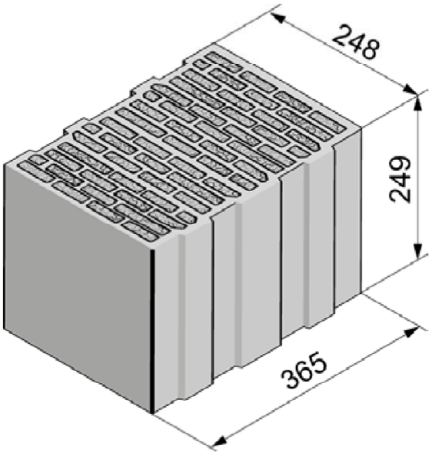

Vertical perforated brick HLz, T7 PF, filled with perlit, EN 771-1			
Producer	-		
Nominal dimensions [mm]	length L	width W	height H
	248	365	249
Density ρ [kg/dm³]	0,5		
Compressive strength f_b [N/mm²]	4 / 6		
Standard or annex	EN 771-1		

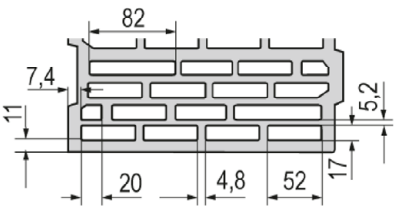

Table C36.1: Installation parameters
(Pre-positioned anchorage with perforated sleeve FIS H K)

Anchor rod	M6	M8	M6	M8	-		M8	M10	M8	M10	-		M12	M16	M12	M16	M12	M16
Internal threaded anchor FIS E	-		-		M6	M8	-		-		M10	M12	-		-		-	
					11x85						15x85							
Perforated sleeve FIS H K	12x50		12x85		16x85				16x130		20x85				20x130		20x200	
Ankerstangen und Innengewindeanker FIS E mit Injektionsanker-Hülse FIS H K																		
Max. installation torque T_{inst} [Nm]	2						5		2		5							
General installation parameters																		
Edge distance c_{min} [mm]	60																	
Spacing s_{min} ∥ [mm]	80																	
Spacing s_{cr} ∥ [mm]	250																	
Spacing s_{min} ⊥ [mm]	80																	
Spacing s_{cr} ⊥ [mm]	250																	
Drilling method																		
Rotary drilling with carbide drill																		

Table C36.2: Group factors

Anchor rod	M6	M8	M6	M8	-		M8	M10	M8	M10	-		M12	M16	M12	M16	M12	M16
Internal threaded anchor FIS E	-		-		M6	M8	-		-		M10	M12	-		-		-	
					11x85						15x85							
Perforated sleeve FIS H K	12x50		12x85		16x85				16x130		20x85				20x130		20x200	
Group factors $\alpha_{g,N}$ ∥ [-]	1,1																	
Group factors $\alpha_{g,V}$ ∥ [-]	1,2																	
Group factors $\alpha_{g,N}$ ⊥ [-]	1,1																	
Group factors $\alpha_{g,V}$ ⊥ [-]	1,2																	

fischer injection system FIS V for masonry

Performance
Vertical perforated brick HLz, T7 PF, filled with perlite, dimensions, installation parameters

Annex C 36

Appendix 57/ 131

Vertical perforated brick HLz, T7 PF, filled with perlite, EN 771-1

Table C37.1: Installation parameters
(Push through anchorage with perforated sleeve FIS H K)

Anchor rod			**M10**	**M12**	**M16**
Perforated sleeve FIS H K			**18x130/200**		**22x130/200**
Anchor rod with perforated sleeve FIS H K					
Max. installation torque	T_{inst}	[Nm]	5		
General installation parameters					
Edge distance	c_{min}	[mm]	60		
Spacing	s_{min} ∥		80		
	s_{cr} ∥		250		
	s_{min} ⊥		80		
	s_{cr} ⊥		250		
Drilling method					
Rotary drilling with carbide drill					

Table C37.2: Group factors

Anchor rod			**M10**	**M12**	**M16**
Perforated sleeve FIS H K			**18x130/200**		**22x130/200**
Group factors	$\alpha_{g,N}$ ∥	[-]	1,1		
	$\alpha_{g,V}$ ∥		1,2		
	$\alpha_{g,N}$ ⊥		1,1		
	$\alpha_{g,V}$ ⊥		1,2		

Vertical perforated brick HLz, T7 PF, filled with perlite, EN 771-1

Table C38.1: Characteristic resistance under tensile load (Pre-positioned anchorage)

Anchor rod		**M6**	**M8**	**M6**	**M8**	**-**	**M8**	**M10**	**M8**	**M10**	**-**	**M12**	**M16**	**M12**	**M16**	**M12**	**M16**
Internal threaded anchor FIS E		**-**		**-**		**M6 / M8** 11x85	**-**		**-**		**M10 / M12** 15x85	**-**		**-**		**-**	
Perforated sleeve FIS H K		**12x50**		**12x85**		**16x85**			**16x130**		**20x85**			**20x130**		**20x200**	
Tensile load N_{Rk} [kN] depending on the compressive strength f_b (temperature range 50/80°C)																	
compressive strength f_b	use category																
4 N/mm²	w/w	w/d				1,2			1,2		1,2			1,2		2,0	
	d/d					1,5			1,5		1,5			1,5		2,0	
6 N/mm²	w/w	w/d				1,5			1,5		1,5			1,5		2,5	
	d/d					1,5			2,0		1,5			2,0		3,0	

Table C38.2: Characteristic resistance under tensile load (Push through anchorage)

Anchor rod		**M10**	**M12**	**M16**
Perforated sleeve FIS H K		**18x130/200**		**22x130/200**
Tensile load N_{Rk} [kN] depending on the compressive strength f_b (temperature range 50/80°C)				
compressive strength f_b	use category			
4 N/mm²	w/w w/d	1,2		1,2
	d/d	1,5		1,5
6 N/mm²	w/w w/d	1,5		1,5
	d/d	2,0		2,0

Factor for job site tests and displacements see annex C110

Factor for temperature range 72/120°C: 0,83

Vertical perforated brick HLz, T7 PF, filled with perlite, EN 771-1

Table C39.1: Characteristic resistance under shear load (Pre-positioned anchorage)

Anchor rod	**M6**	**M8**	**M6**	**M8**	**-**		**M8**	**M10**	**M8**	**M10**	**-**		**M12**	**M16**	**M12**	**M16**	**M12**	**M16**
Internal threaded anchor FIS E	**-**		**-**		**M6**	**M8**	**-**		**-**		**M10**	**M12**	**-**		**-**		**-**	
					11x85						**15x85**							
Perforated sleeve FIS H K	**12x50**		**12x85**		**16x85**				**16x130**		**20x85**				**20x130**		**20x200**	
Shear load V_{Rk} [kN] depending on the compressive strength f_b (temperature range 50/80°C and 72/120°C)																		
compressive strength f_b	use category																	
4 N/mm²	w/w	w/d	0,9		1,5						1,2							
	d/d																	
6 N/mm²	w/w	w/d	1,2		2,0						1,5							
	d/d																	

Table C39.2: Characteristic resistance under shear load (Push through anchorage)

Anchor rod	**M10**	**M12**	**M16**
Perforated sleeve FIS H K	**18x130/200**		**22x130/200**
Shear load V_{Rk} [kN] depending on the compressive strength f_b (temperature range 50/80°C and 72/120°C)			
compressive strength f_b	use category		
4 N/mm²	w/w w/d d/d	1,5	1,2
6 N/mm²	w/w w/d d/d	2,0	1,5

Factor for job site tests and displacements see annex C110

Vertical perforated brick HLz, T9 MW, filled with mineral wool, EN 771-1

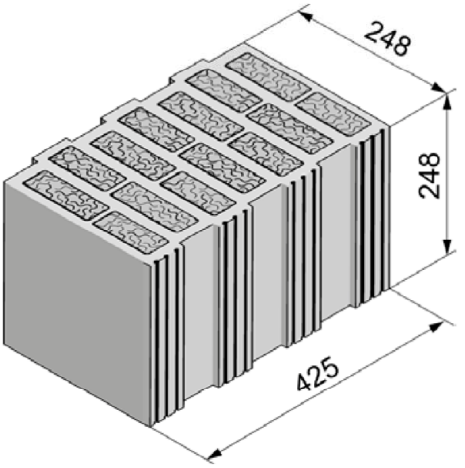

Vertical perforated brick HLz, T9 MW, filled with mineral wool, EN 771-1			
Producer	-		
Nominal dimensions [mm]	length L	width W	height H
	248	425	248
Density ρ [kg/dm³]	0,8		
Compressive strength f_b [N/mm²]	4 / 6 / 8		
Standard or annex	EN 771-1		

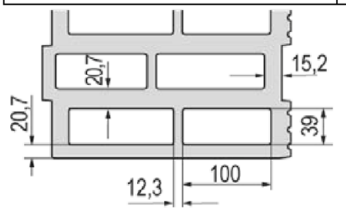

Table C40.1: Installation parameters
(Pre-positioned anchorage with perforated sleeve FIS H K)

Anchor rod	**M6**	**M8**	**M6**	**M8**	**-**		**M8**	**M10**	**M8**	**M10**	**-**		**M12**	**M16**	**M12**	**M16**	**M12**	**M16**
Internal threaded anchor FIS E	**-**		**-**		**M6**	**M8**	**-**		**-**		**M10**	**M12**	**-**		**-**		**-**	
					11x85						**15x85**							
Perforated sleeve FIS H K	**12x50**		**12x85**		**16x85**				**16x130**		**20x85**				**20x130**		**20x200**	
Anchor rod and internal threaded anchor FIS E with perforated sleeve FIS H K																		
Max. installation torque	T_{inst}	[Nm]	3					5	3		5							
General installation parameters																		
Edge distance	c_{min}	[mm]	60															
Spacing	s_{min} ∥		80															
	s_{cr} ∥		250															
	s_{min} ⊥		80															
	s_{cr} ⊥		250															
Drilling method																		
Rotary drilling with carbide drill																		

Table C40.2: Group factors

Anchor rod	**M6**	**M8**	**M6**	**M8**	**-**		**M8**	**M10**	**M8**	**M10**	**-**		**M12**	**M16**	**M12**	**M16**	**M12**	**M16**
Internal threaded anchor FIS E	**-**		**-**		**M6**	**M8**	**-**		**-**		**M10**	**M12**	**-**		**-**		**-**	
					11x85						**15x85**							
Perforated sleeve FIS H K	**12x50**		**12x85**		**16x85**				**16x130**		**20x85**				**20x130**		**20x200**	
Group factors	$\alpha_{g,N}$ ∥	[-]	1,3															
	$\alpha_{g,V}$ ∥		1,2															
	$\alpha_{g,N}$ ⊥		0,6															
	$\alpha_{g,V}$ ⊥		1,2															

fischer injection system FIS V for masonry

Performance
Vertical perforated brick HLz, T9 MW, filled with mineral wool, dimensions, installation parameters

Annex C 40

Appendix 61/ 131

Vertical perforated brick HLz, T9 MW, filled with mineral wool, EN 771-1

Table C41.1: Installation parameters
(Push through anchorage with perforated sleeve FIS H K)

Anchor rod			**M10**	**M12**	**M16**
Perforated sleeve FIS H K			**18x130/200**		**22x130/200**
Anchor rod with perforated sleeve FIS H K					
Max. installation torque	T_{inst}	[Nm]	5		
General installation parameters					
Edge distance	c_{min}	[mm]	60		
Spacing	s_{min} ∥		80		
	s_{cr} ∥		250		
	s_{min} ⊥		80		
	s_{cr} ⊥		250		
Drilling method					
Rotary drilling with carbide drill					

Table C41.2: Group factors

Anchor rod			**M10**	**M12**	**M16**
Perforated sleeve FIS H K			**18x130/200**		**22x130/200**
Group factors	$\alpha_{g,N}$ ∥	[-]	1,3		
	$\alpha_{g,V}$ ∥		1,2		
	$\alpha_{g,N}$ ⊥		0,6		
	$\alpha_{g,V}$ ⊥		1,2		

Vertical perforated brick HLz, T9 MW, filled with mineral wool, EN 771-1

Table C42.1: Characteristic resistance under tensile load (Pre-positioned anchorage)

Anchor rod		**M6**	**M8**	**M6**	**M8**	**-**		**M8**	**M10**	**M8**	**M10**	**-**		**M12**	**M16**	**M12**	**M16**	**M12**	**M16**
Internal threaded anchor FIS E		**-**		**-**		**M6** / **11x85**	**M8** / **11x85**	**-**		**-**		**M10** / **15x85**	**M12** / **15x85**	**-**		**-**		**-**	
Perforated sleeve FIS H K		**12x50**		**12x85**		**16x85**				**16x130**		**20x85**				**20x130**		**20x200**	
Tensile load N_{Rk} [kN] depending on the compressive strength f_b (temperature range 50/80°C)																			
compressive strength f_b	use category																		
4 N/mm²	w/w w/d	1,5				2,0				3,0		2,5				4,0			
	d/d	2,0				2,5				3,0		2,5				4,5			
6 N/mm²	w/w w/d	2,0				2,5				3,5		3,0				5,0			
	d/d	2,0				3,0				4,0		3,0				5,5			
8 N/mm²	w/w w/d	2,5				3,0				4,0		3,5				6,0			
	d/d	2,5				3,0				4,5		3,5				6,5			

Table C42.2: Characteristic resistance under tensile load (Push through anchorage)

Anchor rod		**M10**	**M12**	**M16**
Perforated sleeve FIS H K		**18x130/200**		**22x130/200**
Tensile load N_{Rk} [kN] depending on the compressive strength f_b (temperature range 50/80°C)				
compressive strength f_b	use category			
4 N/mm²	w/w w/d	3,0		4,0
	d/d	3,0		4,5
6 N/mm²	w/w w/d	3,5		5,0
	d/d	4,0		5,5
8 N/mm²	w/w w/d	4,0		6,0
	d/d	4,5		6,5

Factor for job site tests and displacements see annex C110

Factor for temperature range 72/120°C: 0,83

Vertical perforated brick HLz, T9 MW, filled with mineral wool, EN 771-1

Table C43.1: Characteristic resistance under shear load (Pre-positioned anchorage)

Anchor rod	**M6**	**M8**	**M6**	**M8**	**-**		**M8**	**M10**	**M8**	**M10**	**-**		**M12**	**M16**	**M12**	**M16**	**M12**	**M16**
Internal threaded anchor FIS E	**-**		**-**		**M6**	**M8**	**-**		**-**		**M10**	**M12**	**-**		**-**		**-**	
					11x85						**15x85**							
Perforated sleeve FIS H K	**12x50**		**12x85**		**16x85**				**16x130**		**20x85**				**20x130**		**20x200**	
Shear load V_{Rk} [kN] depending on the compressive strength f_b (temperature range 50/80°C and 72/120°C)																		
compressive strength f_b	use category																	
4 N/mm²	w/w	w/d	2,0		2,0				2,5		2,0						1,5	
	d/d																	
6 N/mm²	w/w	w/d	2,5		2,5				3,0		2,5						2,0	
	d/d																	
8 N/mm²	w/w	w/d	2,5		3,0				4,0		3,0						2,5	
	d/d																	

Table C43.2: Characteristic resistance under shear load (Push through anchorage)

Anchor rod	**M10**	**M12**	**M16**
Perforated sleeve FIS H K	**18x130/200**		**22x130/200**
Shear load V_{Rk} [kN] depending on the compressive strength f_b (temperature range 50/80°C and 72/120°C)			
compressive strength f_b	use category		
4 N/mm²	w/w w/d d/d	2,5	2,0
6 N/mm²	w/w w/d d/d	3,0	2,5
8 N/mm²	w/w w/d d/d	4,0	3,0

Factor for job site tests and displacements see annex C110

Vertical perforated brick HLz, FZ 7, filled with mineral wool, EN 771-1

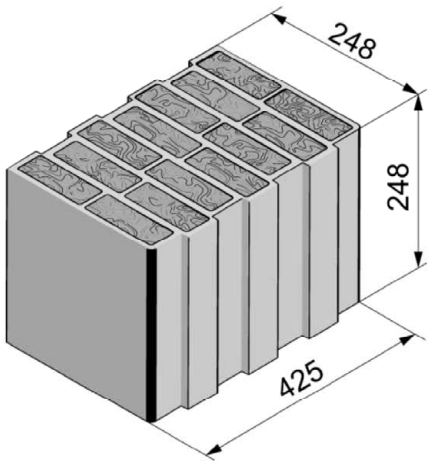

Vertical perforated brick HLz, FZ 7, filled with mineral wool, EN 771-1			
Producer	-		
Nominal dimensions [mm]	length L	width W	height H
	248	425	248
Density ρ [kg/dm³]	0,6		
Compressive strength f_b [N/mm²]	4 / 6 / 8		
Standard or annex	EN 771-1		

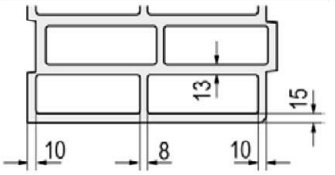

Table C44.1: Installation parameters
(Pre-positioned anchorage with perforated sleeve FIS H K)

Anchor rod	**M6**	**M8**	**M6**	**M8**	**-**		**M8**	**M10**	**M8**	**M10**	**-**		**M12**	**M16**	**M12**	**M16**	**M12**	**M16**
Internal threaded anchor FIS E	**-**		**-**		**M6**	**M8**	**-**		**-**		**M10**	**M12**	**-**		**-**		**-**	
					11x85						**15x85**							
Perforated sleeve FIS H K	**12x50**		**12x85**		**16x85**				**16x130**		**20x85**				**20x130**		**20x200**	
Anchor rod and internal threaded anchor FIS E with perforated sleeve FIS H K																		
Max. installation torque T_{inst} [Nm]	2						5		2		5							
General installation parameters																		
Edge distance c_{min} [mm]	60																	
Spacing s_{min} ∥ [mm]	80																	
Spacing s_{cr} ∥ [mm]	250																	
Spacing s_{min} ⊥ [mm]	80																	
Spacing s_{cr} ⊥ [mm]	250																	
Drilling method																		
Rotary drilling with carbide drill																		

Table C44.2: Group factors

Anchor rod	**M6**	**M8**	**M6**	**M8**	**-**		**M8**	**M10**	**M8**	**M10**	**-**		**M12**	**M16**	**M12**	**M16**	**M12**	**M16**
Internal threaded anchor FIS E	**-**		**-**		**M6**	**M8**	**-**		**-**		**M10**	**M12**	**-**		**-**		**-**	
					11x85						**15x85**							
Perforated sleeve FIS H K	**12x50**		**12x85**		**16x85**				**16x130**		**20x85**				**20x130**		**20x200**	
Group factors $\alpha_{g,N}$ ∥ [-]	1,9																	
Group factors $\alpha_{g,V}$ ∥ [-]	0,9																	
Group factors $\alpha_{g,N}$ ⊥ [-]	1,0																	
Group factors $\alpha_{g,V}$ ⊥ [-]	0,7																	

Vertical perforated brick HLz, FZ 7, filled with mineral wool, EN 771-1

Table C45.1: Installation parameters
(Push through anchorage with perforated sleeve FIS H K)

Anchor rod			**M10**	**M12**	**M16**
Perforated sleeve FIS H K			**18x130/200**		**22x130/200**
Anchor rod with perforated sleeve FIS H K					
Max. installation torque	T_{inst}	[Nm]	5		
General installation parameters					
Edge distance	c_{min}	[mm]	60		
Spacing	s_{min} ∥		80		
	s_{cr} ∥		250		
	s_{min} ⊥		80		
	s_{cr} ⊥		250		
Drilling method					
Rotary drilling with carbide drill					

Table C45.2: Group factors

Anchor rod			**M10**	**M12**	**M16**
Perforated sleeve FIS H K			**18x130/200**		**22x130/200**
Group factors	$\alpha_{g,N}$ ∥	[-]	1,9		
	$\alpha_{g,V}$ ∥		0,9		
	$\alpha_{g,N}$ ⊥		1,0		
	$\alpha_{g,V}$ ⊥		0,7		

Vertical perforated brick HLz, FZ 7, filled with mineral wool, EN 771-1

Table C46.1: Characteristic resistance under tensile load (Pre-positioned anchorage)

Anchor rod		**M6**	**M8**	**M6**	**M8**	**-**	**M8**	**M10**	**M8**	**M10**	**-**	**M12**	**M16**	**M12**	**M16**	**M12**	**M16**
Internal threaded anchor FIS E		**-**		**-**		**M6** / **11x85**	**M8** / **11x85**	**-**	**-**		**M10** / **15x85**	**M12** / **15x85**	**-**		**-**		**-**	
Perforated sleeve FIS H K		**12x50**		**12x85**		**16x85**			**16x130**		**20x85**			**20x130**		**20x200**	
Tensile load N_{Rk} [kN] depending on the compressive strength f_b (temperature range 50/80°C)																	
compressive strength f_b	use category																
4 N/mm²	w/w	w/d	0,6		0,75		1,5			2,0		1,2			2,0		2,0
	d/d		0,6		0,9		1,5			2,0		1,5			2,0		2,5
6 N/mm²	w/w	w/d	0,75		0,9		1,5			2,0		1,5			2,5		2,5
	d/d		0,9		0,9		2,0			2,5		2,0			2,5		3,0
8 N/mm²	w/w	w/d	0,9		1,2		2,0			2,5		2,0			2,5		3,0
	d/d		0,9		1,2		2,0			3,0		2,0			3,0		3,5

Table C46.2: Characteristic resistance under tensile load (Push through anchorage)

Anchor rod		**M10**	**M12**	**M16**
Perforated sleeve FIS H K		**18x130/200**		**22x130/200**
Tensile load N_{Rk} [kN] depending on the compressive strength f_b (temperature range 50/80°C)				
compressive strength f_b	use category			
4 N/mm²	w/w w/d	2,0		2,0
	d/d	2,0		2,0
6 N/mm²	w/w w/d	2,0		2,5
	d/d	2,5		2,5
8 N/mm²	w/w w/d	2,5		2,5
	d/d	3,0		3,0

Factor for job site tests and displacements see annex C110

Factor for temperature range 72/120°C: 0,83

Vertical perforated brick HLz, FZ 7, filled with mineral wool, EN 771-1

Table C47.1: Characteristic resistance under shear load (Pre-positioned anchorage)

Anchor rod	**M6**	**M8**	**M6**	**M8**	**-**	**M8**	**M10**	**M8**	**M10**	**-**	**M12**	**M16**	**M12**	**M16**	**M12**	**M16**
Internal threaded anchor FIS E	**-**		**-**		**M6 M8** **11x85**	**-**		**-**		**M10 M12** **15x85**	**-**		**-**		**-**	
Perforated sleeve FIS H K	**12x50**		**12x85**		**16x85**			**16x130**		**20x85**			**20x130**		**20x200**	
Shear load V_{Rk} [kN] depending on the compressive strength f_b (temperature range 50/80°C and 72/120°C)																
compressive strength f_b	use category															
4 N/mm²	w/w w/d d/d		1,2		1,5										1,5	
6 N/mm²	w/w w/d d/d		1,5		2,0										1,5	
8 N/mm²	w/w w/d d/d		1,5		2,5										2,0	

Table C47.2: Characteristic resistance under shear load (Push through anchorage)

Anchor rod	**M10**	**M12**	**M16**
Perforated sleeve FIS H K	**18x130/200**		**22x130/200**
Shear load V_{Rk} [kN] depending on the compressive strength f_b (temperature range 50/80°C and 72/120°C)			
compressive strength f_b	use category		
4 N/mm²	w/w w/d d/d	1,5	
6 N/mm²	w/w w/d d/d	2,0	
8 N/mm²	w/w w/d d/d	2,5	

Factor for job site tests and displacements see annex C110

Vertical perforated brick HLz, EN 771-1

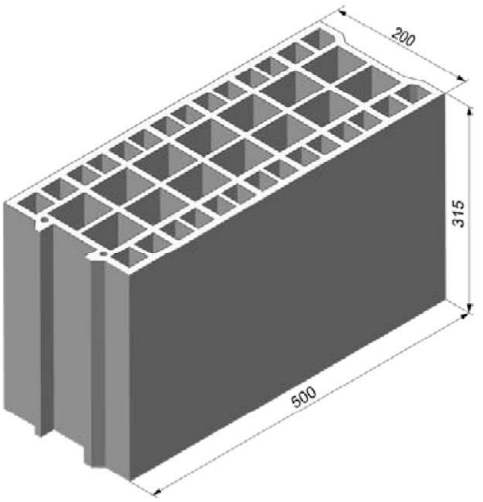

Vertical perforated brick HLz, EN 771-1			
Producer	e.g. Bouyer Leroux		
Nominal dimensions [mm]	length L	width W	height H
	500	200	315
Density ρ [kg/dm³]	≥ 0,6		
Compressive strength f_b [N/mm²]	4 / 6 / 8		
Standard or annex	EN 771-1		

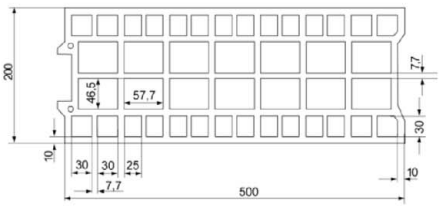

Table C48.1: Installation parameters
(Pre-positioned anchorage with perforated sleeve FIS H K)

Anchor rod		**M6**	**M8**	**M6**	**M8**	**-**	**M8**	**M10**	**M8**	**M10**	**-**	**M12**	**M16**	**M12**	**M16**
Internal threaded anchor FIS E		**-**		**-**		**M6** / **11x85**	**M8** / **11x85**	**-**	**-**		**M10** / **15x85**	**M12** / **15x85**	**-**	**-**	
Perforated sleeve FIS H K		**12x50**		**12x85**		**16x85**			**16x130**		**20x85**			**20x130**	
Anchor rod and internal threaded anchor FIS E with perforated sleeve FIS H K															
Max. installation torque	T_{inst} [Nm]	2													
General installation parameters															
Edge distance	c_{min} [mm]	120													
Spacing	s_{min} ∥ [mm]	120													
	s_{cr} ∥ [mm]	500													
	s_{min} ⊥ = s_{cr} ⊥ [mm]	315													
Drilling method															
Hammer drilling with hard metal hammer drill															

Table C48.2: Group factors

Anchor rod		**M6**	**M8**	**M6**	**M8**	**-**	**M8**	**M10**	**M8**	**M10**	**-**	**M12**	**M16**	**M12**	**M16**
Internal threaded anchor FIS E		**-**		**-**		**M6** / **11x85**	**M8** / **11x85**	**-**	**-**		**M10** / **15x85**	**M12** / **15x85**	**-**	**-**	
Perforated sleeve FIS H K		**12x50**		**12x85**		**16x85**			**16x130**		**20x85**			**20x130**	
Group factors	$\alpha_{g,N}$ ∥ [-]	1,3													
	$\alpha_{g,V}$ ∥ [-]	1,7													
	$\alpha_{g,N}$ ⊥ = $\alpha_{g,V}$ ⊥ [-]	2													

Vertical perforated brick HLz, EN 771-1

Table C49.1: Installation parameters
(Push through anchorage with perforated sleeve FIS H K)

Anchor rod			**M10**	**M12**	**M16**
Perforated sleeve FIS H K			**18x130/200**		**22x130/200**
Anchor rod with perforated sleeve FIS H K					
Max. installation torque	T_{inst}	[Nm]	2		
General installation parameters					
Edge distance	c_{min}	[mm]	120		
Spacing	s_{min} ∥	[mm]	120		
	s_{cr} ∥	[mm]	500		
	$s_{min} \perp = s_{cr} \perp$	[mm]	315		
Drilling method					
Hammer drilling with hard metal hammer drill					

Table C49.2: Group factors

Anchor rod			**M10**	**M12**	**M16**
Perforated sleeve FIS H K			**18x130/200**		**22x130/200**
Group factors	$\alpha_{g,N}$ ∥	[-]	1,3		
	$\alpha_{g,V}$ ∥	[-]	1,7		
	$\alpha_{g,N} \perp = \alpha_{g,V} \perp$	[-]	2		

Vertical perforated brick HLz, EN 771-1

Table C50.1: Characteristic resistance under tensile load (Pre-positioned anchorage)

Anchor rod			M6	M8	M6	M8	-		M8	M10	M8	M10	-		M12	M16	M12	M16
Internal threaded anchor FIS E			-		-		M6	M8	-		-		M10	M12	-		-	
							11x85						15x85					
Perforated sleeve FIS H K			12x50		12x85		16x85				16x130		20x85				20x130	
Tensile load N_{Rk} [kN] depending on the compressive strength f_b (temperature range 50/80°C)																		
compressive strength f_b	use category																	
4 N/mm²	w/w	w/d	0,5		1,5						0,75		1,5				1,5	
	d/d		0,6		1,5						0,9		1,5				2,0	
6 N/mm²	w/w	w/d	0,75		2,0						1,2		2,0				2,5	
	d/d		0,9		2,5						1,2		2,5				2,5	
8 N/mm²	w/w	w/d	0,9		3,0						1,5		3,0				3,5	
	d/d		1,2		3,0						2,0		3,0				3,5	

Table C50.2: Characteristic resistance under tensile load (Push through anchorage)

Anchor rod			M10		M12		M16	
Perforated sleeve FIS H K			18x130/200				22x130/200	
Tensile load N_{Rk} [kN] depending on the compressive strength f_b (temperature range 50/80°C)								
compressive strength f_b	use category							
4 N/mm²	w/w	w/d	0,75				1,5	
	d/d		0,9				2,0	
6 N/mm²	w/w	w/d	1,2				2,5	
	d/d		1,2				2,5	
8 N/mm²	w/w	w/d	1,5				3,5	
	d/d		2,0				3,5	

Factor for job site tests and displacements see annex C110

Factor for temperature range 72/120°C: 0,83

Vertical perforated brick HLz, EN 771-1

Table C51.1: Characteristic resistance under shear load (Pre-positioned anchorage)

Anchor rod	**M6**	**M8**	**M6**	**M8**	**-**		**M8**	**M10**	**M8**	**M10**	**-**		**M12**	**M16**	**M12**	**M16**
Internal threaded anchor FIS E	**-**		**-**		**M6**	**M8**	**-**		**-**		**M10**	**M12**	**-**		**-**	
					11x85						**15x85**					
Perforated sleeve FIS H K	**12x50**		**12x85**		**16x85**				**16x130**		**20x85**				**20x130**	
Shear load V_{Rk} [kN] depending on the compressive strength f_b (temperature range 50/80°C and 72/120°C)																
compressive strength f_b	use category															
4 N/mm²	w/w	w/d			1,5				0,9		1,5		2,5		0,9	
	d/d															
6 N/mm²	w/w	w/d			2,5				1,5		2,5		3,5		1,5	
	d/d															
8 N/mm²	w/w	w/d			3,5				2,0		3,5		4,5		2,0	
	d/d															

Table C51.2: Characteristic resistance under shear load (Push through anchorage)

Anchor rod	**M10**	**M12**	**M16**
Perforated sleeve FIS H K	**18x130/200**		**22x130/200**
Shear load V_{Rk} [kN] depending on the compressive strength f_b (temperature range 50/80°C and 72/120°C)			
compressive strength f_b	use category		
4 N/mm²	w/w w/d d/d	0,9	
6 N/mm²	w/w w/d d/d	1,5	
8 N/mm²	w/w w/d d/d	2,0	

Factor for job site tests and displacements see annex C110

Vertical perforated brick HLz, EN 771-1

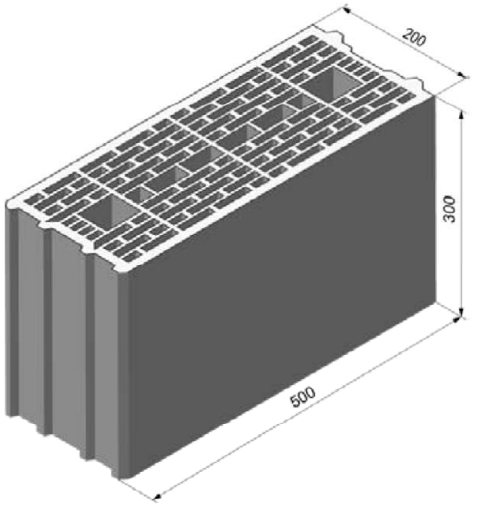

Vertical perforated brick HLz, EN 771-1			
Producer	e.g. Wienerberger		
Nominal dimensions [mm]	length L	width W	height H
	500	200	300
Density ρ [kg/dm³]	≥ 0,7		
Compressive strength f_b [N/mm²]	4 / 6 / 8 / 10		
Standard or annex	EN 771-1		

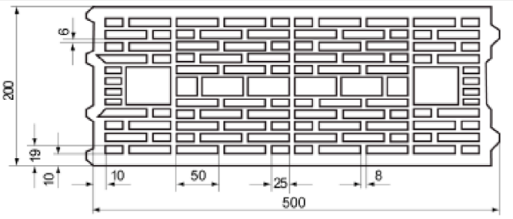

Table C52.1: Installation parameters
(Pre-positioned anchorage with perforated sleeve FIS H K)

Anchor rod	**M6**	**M8**	**M6**	**M8**	**-**	**M8**	**M10**	**M8**	**M10**	**-**	**M12**	**M16**	**M12**	**M16**
Internal threaded anchor FIS E	**-**		**-**		**M6** / **11x85**	**M8** / **11x85**	**-**	**-**		**M10** / **15x85**	**M12** / **15x85**	**-**	**-**	
Perforated sleeve FIS H K	**12x50**		**12x85**		**16x85**			**16x130**		**20x85**			**20x130**	
Anchor rod and internal threaded anchor FIS E with perforated sleeve FIS H K														
Max. installation torque T_{inst} [Nm]	2													
General installation parameters														
Edge distance c_{min} [mm]	50							80			50		80	
Spacing s_{min} ∥ [mm]	100													
Spacing s_{cr} ∥ [mm]	500													
Spacing s_{min} ⊥ = s_{cr} ⊥ [mm]	300													
Drilling method														
Hammer drilling with hard metal hammer drill														

Table C52.2: Group factors

Anchor rod	**M6**	**M8**	**M6**	**M8**	**-**	**M8**	**M10**	**M8**	**M10**	**-**	**M12**	**M16**	**M12**	**M16**
Internal threaded anchor FIS E	**-**		**-**		**M6** / **11x85**	**M8** / **11x85**	**-**	**-**		**M10** / **15x85**	**M12** / **15x85**	**-**	**-**	
Perforated sleeve FIS H K	**12x50**		**12x85**		**16x85**			**16x130**		**20x85**			**20x130**	
Group factors $\alpha_{g,N}$ ∥ [-]	1,4													
Group factors $\alpha_{g,V}$ ∥ [-]	2													
Group factors $\alpha_{g,N}$ ⊥ = $\alpha_{g,V}$ ⊥ [-]	2													

fischer injection system FIS V for masonry

Performance
Vertical perforated brick HLz, dimensions, installation parameters

Annex C 52

Appendix 73/ 131

Vertical perforated brick HLz, EN 771-1

Table C53.1: Installation parameters
(Push through anchorage with perforated sleeve FIS H K)

Anchor rod			**M10**	**M12**	**M16**
Perforated sleeve FIS H K			**18x130/200**		**22x130/200**
Anchor rod with perforated sleeve FIS H K					
Max. installation torque	T_{inst}	[Nm]	2		
General installation parameters					
Edge distance	c_{min}	[mm]	80		
Spacing	s_{min} ∥	[mm]	100		
	s_{cr} ∥	[mm]	500		
	$s_{min} \perp = s_{cr} \perp$	[mm]	300		
Drilling method					
Hammer drilling with hard metal hammer drill					

Table C53.2: Group factors

Anchor rod			**M10**	**M12**	**M16**
Perforated sleeve FIS H K			**18x130/200**		**22x130/200**
Group factors	$\alpha_{g,N}$ ∥	[-]	1,4		
	$\alpha_{g,V}$ ∥	[-]	2		
	$\alpha_{g,N} \perp = \alpha_{g,V} \perp$	[-]	2		

Vertical perforated brick HLz, EN 771-1

Table C54.1: Characteristic resistance under tensile load (Pre-positioned anchorage)

Anchor rod		**M6**	**M8**	**M6**	**M8**	**-**		**M8**	**M10**	**M8**	**M10**	**-**		**M12**	**M16**	**M12**	**M16**
Internal threaded anchor FIS E		**-**		**-**		**M6**	**M8**	**-**		**-**		**M10**	**M12**	**-**		**-**	
						11x85						**15x85**					
Perforated sleeve FIS H K		**12x50**		**12x85**		**16x85**				**16x130**		**20x85**				**20x130**	
Tensile load N_{Rk} [kN] depending on the compressive strength f_b (temperature range 50/80°C)																	
compressive strength f_b	use category																
4 N/mm²	w/w w/d	0,5				0,6				1,2		0,75				1,5	
	d/d	0,6				0,75				1,2		0,9				1,5	
6 N/mm²	w/w w/d	0,75				0,9				1,5		1,2				2,0	
	d/d	0,9				1,2				2,0		1,2				2,5	
8 N/mm²	w/w w/d	0,9				1,2				2,0		1,5				2,5	
	d/d	1,2				1,5				2,5		1,5				3,0	
10 N/mm²	w/w w/d	1,2				1,5				2,5		2,0				3,5	
	d/d	1,5				2,0				3,0		2,0				4,0	

Table C54.2: Characteristic resistance under tensile load (Push through anchorage)

Anchor rod		**M10**	**M12**	**M16**
Perforated sleeve FIS H K		**18x130/200**		**22x130/200**
Tensile load N_{Rk} [kN] depending on the compressive strength f_b (temperature range 50/80°C)				
compressive strength f_b	use category			
4 N/mm²	w/w w/d	1,2		1,5
	d/d	1,2		1,5
6 N/mm²	w/w w/d	1,5		2,0
	d/d	2,0		2,5
8 N/mm²	w/w w/d	2,0		2,5
	d/d	2,5		3,0
10 N/mm²	w/w w/d	2,5		3,5
	d/d	3,0		4,0

Factor for job site tests and displacements see annex C110

Factor for temperature range 72/120°C: 0,83

Vertical perforated brick HLz, EN 771-1

Table C55.1: Characteristic resistance under shear load (Pre-positioned anchorage)

Anchor rod		**M6**	**M8**	**M6**	**M8**	**-**		**M8**	**M10**	**M8**	**M10**	**-**		**M12**	**M16**	**M12**	**M16**
Internal threaded anchor FIS E		**-**		**-**		**M6**	**M8**	**-**		**-**		**M10**	**M12**	**-**		**-**	
						11x85						**15x85**					
Perforated sleeve FIS H K		**12x50**		**12x85**		**16x85**				**16x130**		**20x85**				**20x130**	
Shear load V_{Rk} [kN] depending on the compressive strength f_b (temperature range 50/80°C and 72/120°C)																	
compressive strength f_b	use category																
4 N/mm²	w/w w/d d/d	0,9		1,2		0,9		1,2		0,6		2,0				0,6	
6 N/mm²	w/w w/d d/d	1,2		1,5		1,2		1,5		0,9		3,0				0,9	
8 N/mm²	w/w w/d d/d	1,5		2,0		1,5		2,0		1,2		4,0				1,2	
10 N/mm²	w/w w/d d/d	2,0		3,0		2,0		3,0		1,5		5,0				1,5	

Table C55.2: Characteristic resistance under shear load (Push through anchorage)

Anchor rod		**M10**	**M12**	**M16**
Perforated sleeve FIS H K		**18x130/200**		**22x130/200**
Shear load V_{Rk} [kN] depending on the compressive strength f_b (temperature range 50/80°C and 72/120°C)				
compressive strength f_b	use category			
4 N/mm²	w/w w/d d/d	0,6		
6 N/mm²	w/w w/d d/d	0,9		
8 N/mm²	w/w w/d d/d	1,2		
10 N/mm²	w/w w/d d/d	1,5		

Factor for job site tests and displacements see annex C110

Vertical perforated brick HLz, EN 771-1

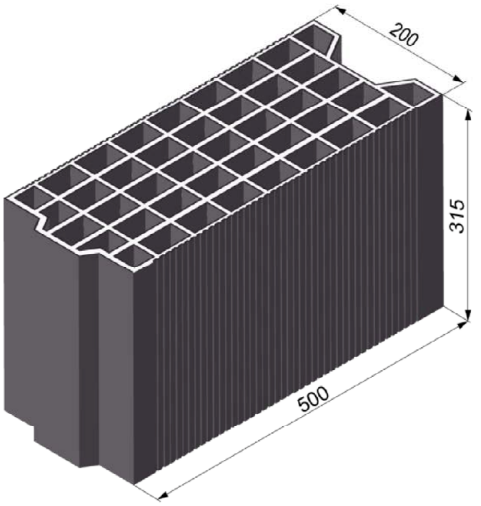

Vertical perforated brick HLz, EN 771-1				
Producer		e.g. Terreal		
Nominal dimensions [mm]		length L	width W	height H
		500	200	315
Density ρ	[kg/dm³]	≥ 0,7		
Compressive strength f_b	[N/mm²]	2 / 4 / 6 / 8		
Standard or annex		EN 771-1		

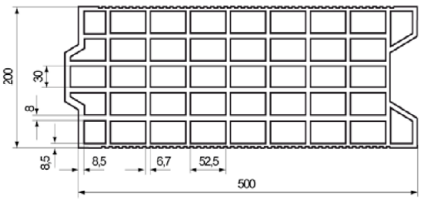

Table C56.1: Installation parameters
(Pre-positioned anchorage with perforated sleeve FIS H K)

Anchor rod	**M6**	**M8**	**M6**	**M8**	**-**	**M8**	**M10**	**M8**	**M10**	**-**	**M12**	**M16**	**M12**	**M16**
Internal threaded anchor FIS E	**-**		**-**		**M6** **M8** **11x85**	**-**		**-**		**M10** **M12** **15x85**	**-**		**-**	
Perforated sleeve FIS H K	**12x50**		**12x85**		**16x85**			**16x130**		**20x85**			**20x130**	

Anchor rod and internal threaded anchor FIS E with perforated sleeve FIS H K						
Max. installation torque	T_{inst}	[Nm]	2			
General installation parameters						
Edge distance	c_{min}	[mm]	50	80	50	80
Spacing	s_{min} ∥		100			
	s_{cr} ∥		500			
	s_{min} ⊥		100			
	s_{cr} ⊥		315			
Drilling method						
Hammer drilling with hard metal hammer drill						

Table C56.2: Group factors

Anchor rod	**M6**	**M8**	**M6**	**M8**	**-**	**M8**	**M10**	**M8**	**M10**	**-**	**M12**	**M16**	**M12**	**M16**
Internal threaded anchor FIS E	**-**		**-**		**M6** **M8** **11x85**	**-**		**-**		**M10** **M12** **15x85**	**-**		**-**	
Perforated sleeve FIS H K	**12x50**		**12x85**		**16x85**			**16x130**		**20x85**			**20x130**	

Group factors	$\alpha_{g,N}$ ∥	[-]	1,1
	$\alpha_{g,V}$ ∥		1,2
	$\alpha_{g,N}$ ⊥		1,1
	$\alpha_{g,V}$ ⊥		1,2

fischer injection system FIS V for masonry

Performance
Vertical perforated brick HLz, dimensions, installation parameters

Annex C 56

Appendix 77/ 131

Vertical perforated brick HLz, EN 771-1

Table C57.1: Installation parameters
(Push through anchorage with perforated sleeve FIS H K)

Anchor rod			**M10**	**M12**	**M16**
Perforated sleeve FIS H K			**18x130/200**		**22x130/200**
Anchor rod with perforated sleeve FIS H K					
Max. installation torque	T_{inst}	[Nm]	2		
General installation parameters					
Edge distance	c_{min}	[mm]	80		
Spacing	s_{min} ∥		100		
	s_{cr} ∥		500		
	s_{min} ⊥		100		
	s_{cr} ⊥		315		
Drilling method					
Hammer drilling with hard metal hammer drill					

Table C57.2: Group factors

Anchor rod			**M10**	**M12**	**M16**
Perforated sleeve FIS H K			**18x130/200**		**22x130/200**
Group factors	$\alpha_{g,N}$ ∥	[-]	1,1		
	$\alpha_{g,V}$ ∥		1,2		
	$\alpha_{g,N}$ ⊥		1,1		
	$\alpha_{g,V}$ ⊥		1,2		

Vertical perforated brick HLz, EN 771-1

Table C58.1: Characteristic resistance under tensile load (Pre-positioned anchorage)

Anchor rod		**M6**	**M8**	**M6**	**M8**	**-**		**M8**	**M10**	**M8**	**M10**	**-**		**M12**	**M16**	**M12**	**M16**
Internal threaded anchor FIS E		**-**		**-**		**M6**	**M8**	**-**		**-**		**M10**	**M12**	**-**		**-**	
						11x85						**15x85**					
Perforated sleeve FIS H K		**12x50**		**12x85**		**16x85**				**16x130**		**20x85**				**20x130**	
Tensile load N_{Rk} [kN] depending on the compressive strength f_b (temperature range 50/80°C)																	
compressive strength f_b	use category																
2 N/mm²	w/w	w/d															
	d/d					0,5				0,6		0,5				0,6	
4 N/mm²	w/w	w/d															
	d/d		0,9							1,2							
6 N/mm²	w/w	w/d															
	d/d																
8 N/mm²	w/w	w/d															
	d/d																

Table C58.2: Characteristic resistance under tensile load (Push through anchorage)

Anchor rod		**M10**	**M12**	**M16**
Perforated sleeve FIS H K		**18x130/200**		**22x130/200**
Tensile load N_{Rk} [kN] depending on the compressive strength f_b (temperature range 50/80°C)				
compressive strength f_b	use category			
2 N/mm²	w/w w/d			
	d/d			
4 N/mm²	w/w w/d			
	d/d			
6 N/mm²	w/w w/d			
	d/d			
8 N/mm²	w/w w/d			
	d/d			

Factor for job site tests and displacements see annex C110

Factor for temperature range 72/120°C: 0,83

Vertical perforated brick HLz, EN 771-1

Table C59.1: Characteristic resistance under shear load (Pre-positioned anchorage)

Anchor rod		**M6**	**M8**	**M6**	**M8**	**-**		**M8**	**M10**	**M8**	**M10**	**-**		**M12**	**M16**	**M12**	**M16**
Internal threaded anchor FIS E		**-**		**-**		**M6**	**M8**	**-**		**-**		**M10**	**M12**	**-**		**-**	
						11x85						**15x85**					
Perforated sleeve FIS H K		**12x50**		**12x85**		**16x85**				**16x130**		**20x85**				**20x130**	
Shear load V_{Rk} [kN] depending on the compressive strength f_b (temperature range 50/80°C and 72/120°C)																	
compressive strength f_b	use category																
2 N/mm²	w/w w/d d/d	0,3		0,6		0,3		0,6		0,6		0,9				0,75	
4 N/mm²	w/w w/d d/d	0,75		1,2		0,75		1,2		1,2		2,0				1,5	
6 N/mm²	w/w w/d d/d	0,9		2,0		0,9		2,0		1,5		3,0				2,0	
8 N/mm²	w/w w/d d/d	1,5		2,5		1,5		2,5		2,0		4,0				3,0	

Table C59.2: Characteristic resistance under shear load (Push through anchorage)

Anchor rod		**M10**	**M12**	**M16**
Perforated sleeve FIS H K		**18x130/200**		**22x130/200**
Shear load V_{Rk} [kN] depending on the compressive strength f_b (temperature range 50/80°C and 72/120°C)				
compressive strength f_b	use category			
2 N/mm²	w/w w/d d/d	0,6		0,75
4 N/mm²	w/w w/d d/d	1,2		1,5
6 N/mm²	w/w w/d d/d	1,5		2,0
8 N/mm²	w/w w/d d/d	2,0		3,0

Factor for job site tests and displacements see annex C110

Vertical perforated brick HLz, EN 771-1

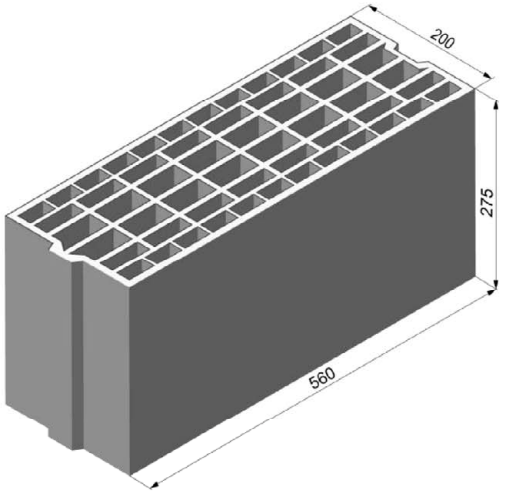

Vertical perforated brick HLz, EN 771-1			
Producer	e.g. Imery		
Nominal dimensions [mm]	length L	width W	height H
	560	200	275
Density ρ [kg/dm³]	≥ 0,7		
Compressive strength f_b [N/mm²]	4 / 6 / 8		
Standard or annex	EN 771-1		

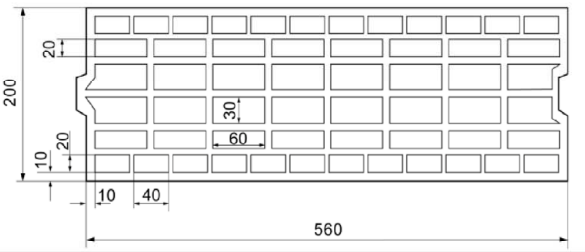

Table C60.1: Installation parameters

Anchor rod		**M8**	**M10**	**M10**	**M12**	**M12**	**M16**	**M16**
Perforated sleeve FIS H K		**16x130**		**18x130/200**		**20x130**		**22x130/200**
Anchor rod with perforated sleeve FIS H K								
Max. installation torque	T_{inst} [Nm]	2						
General installation parameters								
Edge distance	c_{min} [mm]	80						
Spacing	$s_{min} \parallel = s_{cr} \parallel$ [mm]	560						
	$s_{min} \perp = s_{cr} \perp$ [mm]	275						
Drilling method								
Hammer drilling with hard metal hammer drill								

Table C60.2: Group factors

Anchor rod		**M8**	**M10**	**M10**	**M12**	**M12**	**M16**	**M16**
Perforated sleeve FIS H K		**16x130**		**18x130/200**		**20x130**		**22x130/200**
Group factors	$\alpha_{g,N} \parallel$	2						
	$\alpha_{g,V} \parallel$							
	$\alpha_{g,N} \perp$							
	$\alpha_{g,V} \perp$ [-]							

Vertical perforated brick HLz, EN 771-1

Table C61.1: Characteristic resistance under tensile load

Anchor rod		**M8**	**M10**	**M10**	**M12**	**M12**	**M16**	**M16**
Perforated sleeve FIS H K		**16x130**		**18x130/200**		**20x130**		**22x130/200**
Tensile load N_{Rk} [kN] depending on the compressive strength f_b (temperature range 50/80°C)								
compressive strength f_b	use category							
4 N/mm²	w/w w/d	0,9				1,2		
	d/d	1,2				1,5		
6 N/mm²	w/w w/d	1,5				2,0		
	d/d	1,5				2,0		
8 N/mm²	w/w w/d	2,0				2,5		
	d/d	2,5				3,0		

Factor for temperature range 72/120°C: 0,83

Table C61.2: Characteristic resistance under shear load

Anchor rod		**M8**	**M10**	**M10**	**M12**	**M12**	**M16**	**M16**
Perforated sleeve FIS H K		**16x130**		**18x130/200**		**20x130**		**22x130/200**
Shear load V_{Rk} [kN] depending on the compressive strength f_b (temperature range 50/80°C and 72/120°C)								
compressive strength f_b	use category							
4 N/mm²	w/w w/d	0,9						
	d/d							
6 N/mm²	w/w w/d	1,5						
	d/d							
8 N/mm²	w/w w/d	2,0						
	d/d							

Factor for job site tests and displacements see annex C110

Vertical perforated brick HLz, EN 771-1

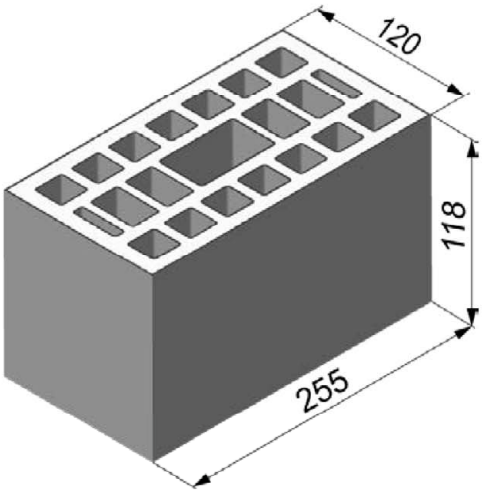

Vertical perforated brick HLz, EN 771-1			
Producer	e.g. Wienerberger		
Nominal dimensions [mm]	length L	width W	height H
	255	120	118
Density ρ [kg/dm³]	≥ 1,0		
Compressive strength f_b [N/mm²]	2 / 4 / 6 / 8 / 10 / 12		
Standard or annex	EN 771-1		

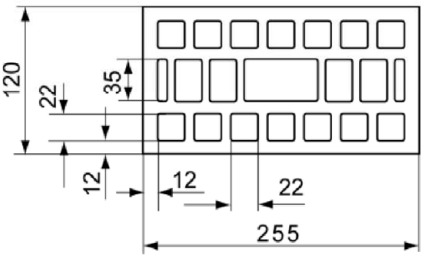

Table C62.1: Installation parameters

Anchor rod	**M6**	**M8**	**M6**	**M8**	**-**		**M8**	**M10**	**-**		**M12**	**M16**
Internal threaded anchor FIS E	**-**		**-**		**M6**	**M8**	**-**		**M10**	**M12**	**-**	
					11x85				**15x85**			
Perforated sleeve FIS H K	**12x50**		**12x85**		**16x85**				**20x85**			
Anchor rod and internal threaded anchor FIS E with perforated sleeve FIS H K												
Max. installation torque T_{inst}	[Nm]	2										
General installation parameters												
Edge distance c_{min}	[mm]	60										
Spacing $s_{cr}\,\parallel = s_{min}\,\parallel$	[mm]	255										
Spacing $s_{cr}\,\perp = s_{min}\,\perp$	[mm]	120										
Drilling method												
Hammer drilling with hard metal hammer drill												

Table C62.2: Group factors

Anchor rod	**M6**	**M8**	**M6**	**M8**	**-**		**M8**	**M10**	**-**		**M12**	**M16**
Internal threaded anchor FIS E	**-**		**-**		**M6**	**M8**	**-**		**M10**	**M12**	**-**	
					11x85				**15x85**			
Perforated sleeve FIS H K	**12x50**		**12x85**		**16x85**				**20x85**			
Group factors $\alpha_{g,N}\,\parallel$ / $\alpha_{g,V}\,\parallel$ / $\alpha_{g,N}\,\perp$ / $\alpha_{g,V}\,\perp$	[-]	2										

fischer injection system FIS V for masonry

Performance
Vertical perforated brick HLz, dimensions, installation parameters

Annex C 62

Appendix 83/ 131

Vertical perforated brick HLz, EN 771-1

Table C63.1: Characteristic resistance under tensile load

Anchor rod		M6	M8	M6	M8	-		M8	M10	-		M12	M16
Internal threaded anchor FIS E		-		-		M6	M8	-		M10	M12	-	
						11x85				15x85			
Perforated sleeve FIS H K		12x50		12x85		16x85				20x85			
Tensile load N_{Rk} [kN] depending on the compressive strength f_b (temperature range 50/80°C)													
compressive strength f_b	use category												
2 N/mm²	w/w w/d	0,4		0,5						-[1]			
	d/d	0,5		0,5						-[1]			
4 N/mm²	w/w w/d	0,9		0,9						0,5			
	d/d	0,9		1,2						0,5			
6 N/mm²	w/w w/d	1,2		1,5						0,75			
	d/d	1,5		1,5						0,75			
8 N/mm²	w/w w/d	1,5		2,0						0,9			
	d/d	2,0		2,0						0,9			
10 N/mm²	w/w w/d	2,0		2,5						1,2			
	d/d	2,5		2,5						1,2			
12 N/mm²	w/w w/d	2,5		3,0						1,5			
	d/d	3,0		3,5						1,5			

[1] No performance assesses

Factor for job site tests and displacements see annex C110

Factor for temperature range 72/120°C: 0,83

Vertical perforated brick HLz, EN 771-1

Table C64.1: Characteristic resistance under shear load

Anchor rod		M6	M8	M6	M8	-		M8	M10	-		M12	M16
Internal threaded anchor FIS E		-		-		M6	M8	-		M10	M12	-	
						11x85				15x85			
Perforated sleeve FIS H K		12x50		12x85		16x85				20x85			
Shear load V_{Rk} [kN] depending on the compressive strength f_b (temperature range 50/80°C and 72/120°C)													
compressivestrength f_b	use category												
2 N/mm²	w/w w/d d/d	0,6	0,75	0,6	0,75	0,9							
4 N/mm²	w/w w/d d/d	1,2	1,5	1,2	1,5	2,0							
6 N/mm²	w/w w/d d/d	2,0	2,0	2,0	2,0	2,5							
8 N/mm²	w/w w/d d/d	2,5	3,0	2,5	3,0	3,5							
10 N/mm²	w/w w/d d/d	3,0	3,5	3,0	3,5	4,5							
12 N/mm²	w/w w/d d/d	4,0	4,5	4,0	4,5	5,5							

Factor for job site tests and displacements see annex C110

Vertical perforated brick HLz, EN 771-1

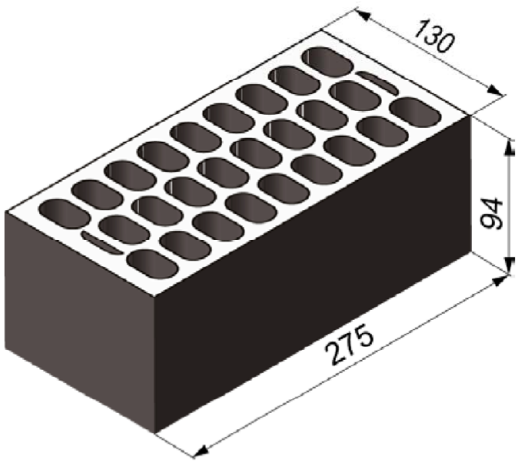

Vertical perforated brick HLz, EN 771-1			
Producer	e.g. Cermanica Farreny S.A.		
Nominal dimensions [mm]	length L	width W	height H
	275	130	94
Density ρ [kg/dm³]	≥ 0,8		
Compressive strength f_b [N/mm²]	6 / 8 / 12 / 16 / 20		
Standard or annex	EN 771-1		

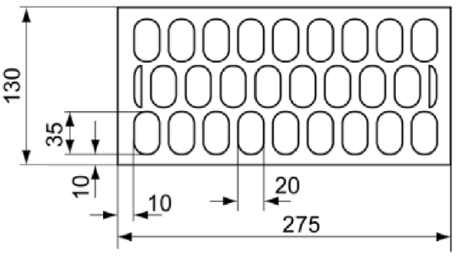

Table C65.1: Installation parameters

Anchor rod	**M6**	**M8**	**M6**	**M8**	**-**	**M8**	**M10**	**-**	**M12**	**M16**
Internal threaded anchor FIS E	**-**		**-**		**M6** / **11x85**	**M8** / **11x85**	**-**	**M10** / **15x85**	**M12** / **15x85**	**-**
Perforated sleeve FIS H K	**12x50**		**12x85**		**16x85**			**20x85**		
Anchor rod and internal threaded anchor FIS E with perforated sleeve FIS H K										
Max. installation torque T_{inst} [Nm]	2									
General installation parameters										
Edge distance c_{min} [mm]	100							120		
Spacing s_{cr} ∥ = s_{min} ∥ [mm]	275									
Spacing s_{cr} ⊥ = s_{min} ⊥ [mm]	95									
Drilling method										
Hammer drilling with hard metal hammer drill										

Table C65.2: Group factors

Anchor rod	**M6**	**M8**	**M6**	**M8**	**-**	**M8**	**M10**	**-**	**M12**	**M16**
Internal threaded anchor FIS E	**-**		**-**		**M6** / **11x85**	**M8** / **11x85**	**-**	**M10** / **15x85**	**M12** / **15x85**	**-**
Perforated sleeve FIS H K	**12x50**		**12x85**		**16x85**			**20x85**		
Group factors $\alpha_{g,N}$ ∥, $\alpha_{g,V}$ ∥, $\alpha_{g,N}$ ⊥, $\alpha_{g,V}$ ⊥ [-]	2									

fischer injection system FIS V for masonry

Performance
Vertical perforated brick HLz, dimensions, installation parameters

Annex C 65

Appendix 86/ 131

Vertical perforated brick HLz, EN 771-1

Table C66.1: Characteristic resistance under tensile load

Anchor rod	M6	M8	M6	M8	-	M8	M10	-	M12	M16
Internal threaded anchor FIS E	-		-		M6 / M8	-		M10 / M12	-	
					11x85			15x85		
Perforated sleeve FIS H K	12x50		12x85		16x85			20x85		

Tensile load N_{Rk} [kN] depending on the compressive strength f_b (temperature range 50/80°C)				
compressive strength f_b	use category			
6 N/mm²	w/w	w/d	0,4	0,9
	d/d		0,4	0,9
8 N/mm²	w/w	w/d	0,5	1,2
	d/d		0,6	1,2
12 N/mm²	w/w	w/d	0,75	1,5
	d/d		0,9	2,0
16 N/mm²	w/w	w/d	0,9	2,0
	d/d		1,2	2,5
20 N/mm²	w/w	w/d	1,2	3,0
	d/d		1,5	3,0

Factor for temperature range 72/120°C: 0,83

Table C66.2: Characteristic resistance under shear load

Anchor rod	M6	M8	M6	M8	-	M8	M10	-	M12	M16
Internal threaded anchor FIS E	-		-		M6 / M8	-		M10 / M12	-	
					11x85			15x85		
Perforated sleeve FIS H K	12x50		12x85		16x85			20x85		

Shear load V_{Rk} [kN] depending on the compressive strength f_b (temperature range 50/80°C and 72/120°C)				
compressive strength f_b	use category			
6 N/mm²	w/w / d/d	w/d	1,2	1,2
8 N/mm²	w/w / d/d	w/d	1,5	1,5
12 N/mm²	w/w / d/d	w/d	2,0	2,5
16 N/mm²	w/w / d/d	w/d	3,0	3,0
20 N/mm²	w/w / d/d	w/d	4,0	4,0

Factor for job site tests and displacements see annex C110

Vertical perforated brick HLz, EN 771-1

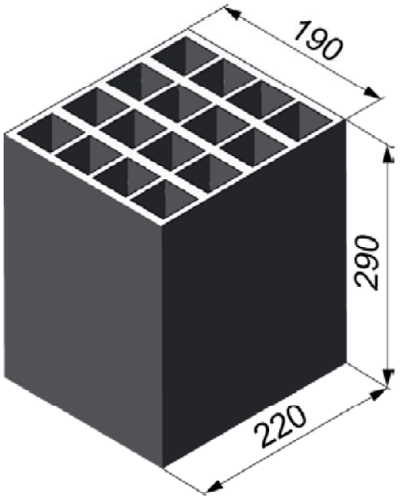

Vertical perforated brick HLz, EN 771-1			
Producer	e.g. Perceram		
Nominal dimensions [mm]	length L	width W	height H
	220	190	290
Density ρ [kg/dm³]	≥ 0,7		
Compressive strength f_b [N/mm²]	6 / 8 / 10		
Standard or annex	EN 771-1		

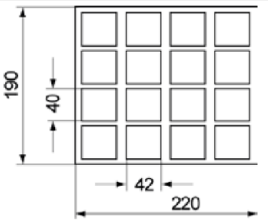

Table C67.1: Installation parameters
(Pre-positioned anchorage with perforated sleeve FIS H K)

Anchor rod	**M6**	**M8**	**M6**	**M8**	**-**		**M8**	**M10**	**M8**	**M10**	**-**		**M12**	**M16**	**M12**	**M16**
Internal threaded anchor FIS E	**-**		**-**		**M6**	**M8**	**-**		**-**		**M10**	**M12**	**-**		**-**	
					11x85						**15x85**					
Perforated sleeve FIS H K	**12x50**		**12x85**		**16x85**				**16x130**		**20x85**				**20x130**	
Anchor rod and internal threaded anchor FIS E with perforated sleeve FIS H K																
Max. installation torque T_{inst}	[Nm]	2														
General installation parameters																
Edge distance c_{min}	[mm]	110														
Spacing $s_{min} \parallel = s_{cr} \parallel$	[mm]	220														
Spacing $s_{min} \perp = s_{cr} \perp$	[mm]	290														
Drilling method																
Hammer drilling with hard metal hammer drill																

Table C67.2: Group factors

Anchor rod	**M6**	**M8**	**M6**	**M8**	**-**		**M8**	**M10**	**M8**	**M10**	**-**		**M12**	**M16**	**M12**	**M16**
Internal threaded anchor FIS E	**-**		**-**		**M6**	**M8**	**-**		**-**		**M10**	**M12**	**-**		**-**	
					11x85						**15x85**					
Perforated sleeve FIS H K	**12x50**		**12x85**		**16x85**				**16x130**		**20x85**				**20x130**	
Group factors $\alpha_{g,N} \parallel$	[-]	2														
Group factors $\alpha_{g,V} \parallel$	[-]	2														
Group factors $\alpha_{g,N} \perp$	[-]	2														
Group factors $\alpha_{g,V} \perp$	[-]	2														

Vertical perforated brick HLz, EN 771-1

Table C68.1: Installation parameters
(Push through anchorage with perforated sleeve FIS H K)

Anchor rod			**M10**	**M12**	**M16**
Perforated sleeve FIS H K			**18x130/200**		**22x130/200**
Anchor rod with perforated sleeve FIS H K					
Max. installation torque	T_{inst}	[Nm]	2		
General installation parameters					
Edge distance	c_{min}	[mm]	110		
Spacing	s_{min} II = s_{cr} II	[mm]	220		
	s_{min} ⊥ = s_{cr} ⊥	[mm]	290		
Drilling method					
Hammer drilling with hard metal hammer drill					

Table C68.2: Group factors

Anchor rod			**M10**	**M12**	**M16**
Perforated sleeve FIS H K			**18x130/200**		**22x130/200**
Group factors	$\alpha_{g,N}$ II	[-]	2		
	$\alpha_{g,V}$ II	[-]	2		
	$\alpha_{g,N}$ ⊥	[-]	2		
	$\alpha_{g,V}$ ⊥	[-]	2		

Vertical perforated brick HLz, EN 771-1

Table C69.1: Characteristic resistance under tensile load (Pre-positioned anchorage)

Anchor rod		**M6**	**M8**	**M6**	**M8**	**-**		**M8**	**M10**	**M8**	**M10**	**-**		**M12**	**M16**	**M12**	**M16**
Internal threaded anchor FIS E		**-**		**-**		**M6**	**M8**	**-**		**-**		**M10**	**M12**	**-**		**-**	
						11x85						**15x85**					
Perforated sleeve FIS H K		**12x50**		**12x85**		**16x85**				**16x130**		**20x85**				**20x130**	
Tensile load N_{Rk} [kN] depending on the compressive strength f_b (temperature range 50/80°C)																	
compressive strength f_b	use category																
6 N/mm²	w/w w/d	0,3		1,2		1,2				1,5		1,2				1,5	
	d/d	0,4		1,5		1,5				1,5		1,5				1,5	
8 N/mm²	w/w w/d	0,5		1,5		1,5				2,0		1,5				2,0	
	d/d	0,5		2,0		2,0				2,5		2,0				2,5	
10 N/mm²	w/w w/d	0,6		2,0		2,0				2,5		2,0				2,5	
	d/d	0,6		2,5		2,5				3,0		2,5				3,0	

Table C69.2: Characteristic resistance under tensile load (Push through anchorage)

Anchor rod		**M10**	**M12**	**M16**
Perforated sleeve FIS H K		**18x130/200**		**22x130/200**
Tensile load N_{Rk} [kN] depending on the compressive strength f_b (temperature range 50/80°C)				
compressive strength f_b	use category			
6 N/mm²	w/w w/d	1,5		
	d/d	1,5		
8 N/mm²	w/w w/d	2,0		
	d/d	2,5		
10 N/mm²	w/w w/d	2,5		
	d/d	3,0		

Factor for job site tests and displacements see annex C110

Factor for temperature range 72/120°C: 0,83

Vertical perforated brick HLz, EN 771-1

Table C70.1: Characteristic resistance under shear load (Pre-positioned anchorage)

Anchor rod		**M6**	**M8**	**M6**	**M8**	**-**		**M8**	**M10**	**M8**	**M10**	**-**		**M12**	**M16**	**M12**	**M16**
Internal threaded anchor FIS E		**-**		**-**		**M6**	**M8**	**-**		**-**		**M10**	**M12**	**-**		**-**	
						11x85						**15x85**					
Perforated sleeve FIS H K		**12x50**		**12x85**		**16x85**				**16x130**		**20x85**				**20x130**	
Shear load V_{Rk} [kN] depending on the compressive strength f_b (temperature range 50/80°C and 72/120°C)																	
compressive strength f_b	use category																
6 N/mm²	w/w w/d d/d	1,5		1,5		1,5				2,5		1,5				2,0	
8 N/mm²	w/w w/d d/d	2,0		2,0		2,0				3,5		2,0				3,0	
10 N/mm²	w/w w/d d/d	2,5		3,0		3,0				4,5		3,0				3,5	

Table C70.2: Characteristic resistance under shear load (Push through anchorage)

Anchor rod		**M10**	**M12**	**M16**
Perforated sleeve FIS H K		**18x130/200**		**22x130/200**
Shear load V_{Rk} [kN] depending on the compressive strength f_b (temperature range 50/80°C and 72/120°C)				
compressive strength f_b	use category			
6 N/mm²	w/w w/d d/d	2,0		
8 N/mm²	w/w w/d d/d	3,0		
10 N/mm²	w/w w/d d/d	3,5		

Factor for job site tests and displacements see annex C110

Vertical perforated brick HLz, EN 771-1

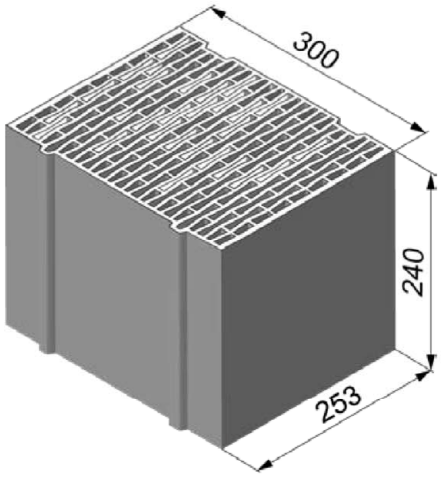

Vertical perforated brick HLz, EN 771-1			
Producer	e.g. Ziegelwerk Brenna		
Nominal dimensions [mm]	length L	width W	height H
	253	300	240
Density ρ [kg/dm³]	≥ 0,8		
Compressive strength f_b [N/mm²]	2 / 4 / 6		
Standard or annex	EN 771-1		

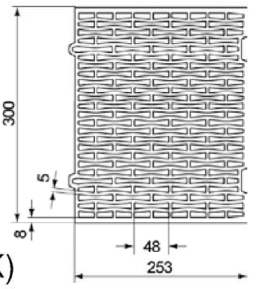

Table C71.1: Installation parameters
(Pre-positioned anchorage with perforated sleeve FIS H K)

Anchor rod	**M6**	**M8**	**M6**	**M8**	**-**		**M8**	**M10**	**M8**	**M10**	**-**		**M12**	**M16**	**M12**	**M16**
Internal threaded anchor FIS E	**-**		**-**		**M6**	**M8**	**-**		**-**		**M10**	**M12**	**-**		**-**	
					11x85						**15x85**					
Perforated sleeve FIS H K	**12x50**		**12x85**		**16x85**				**16x130**		**20x85**				**20x130**	
Anchor rod and internal threaded anchor FIS E with perforated sleeve FIS H K																
Max. installation torque T_{inst}	[Nm]	2														
General installation parameters																
Edge distance c_{min}	[mm]	60														
Spacing $s_{min} \parallel = s_{cr} \parallel$	[mm]	255														
Spacing $s_{min} \perp = s_{cr} \perp$	[mm]	240														
Drilling method																
Hammer drilling with hard metal hammer drill																

Table C71.2: Group factors

Anchor rod	**M6**	**M8**	**M6**	**M8**	**-**		**M8**	**M10**	**M8**	**M10**	**-**		**M12**	**M16**	**M12**	**M16**
Internal threaded anchor FIS E	**-**		**-**		**M6**	**M8**	**-**		**-**		**M10**	**M12**	**-**		**-**	
					11x85						**15x85**					
Perforated sleeve FIS H K	**12x50**		**12x85**		**16x85**				**16x130**		**20x85**				**20x130**	
Group factors $\alpha_{g,N} \parallel$	[-]	2														
Group factors $\alpha_{g,V} \parallel$	[-]	2														
Group factors $\alpha_{g,N} \perp$	[-]	2														
Group factors $\alpha_{g,V} \perp$	[-]	2														

Vertical perforated brick HLz, EN 771-1

Table C72.1: Installation parameters
(Push through anchorage with perforated sleeve FIS H K)

Anchor rod			**M10**	**M12**	**M16**
Perforated sleeve FIS H K			**18x130/200**		**22x130/200**
Anchor rod with perforated sleeve FIS H K					
Max. installation torque	T_{inst}	[Nm]	2		
General installation parameters					
Edge distance	c_{min}	[mm]	60		
Spacing	s_{min} II = s_{cr} II	[mm]	255		
	s_{min} ⊥ = s_{cr} ⊥	[mm]	240		
Drilling method					
Hammer drilling with hard metal hammer drill					

Table C72.2: Group factors

Anchor rod			**M10**	**M12**	**M16**
Perforated sleeve FIS H K			**18x130/200**		**22x130/200**
Group factors	$\alpha_{g,N}$ II	[-]	2		
	$\alpha_{g,V}$ II	[-]	2		
	$\alpha_{g,N}$ ⊥	[-]	2		
	$\alpha_{g,V}$ ⊥	[-]	2		

Vertical perforated brick HLz, EN 771-1

Table C73.1: Characteristic resistance under tensile load (Pre-positioned anchorage)

Anchor rod		**M6**	**M8**	**M6**	**M8**	**-**		**M8**	**M10**	**M8**	**M10**	**-**		**M12**	**M16**	**M12**	**M16**
Internal threaded anchor FIS E		**-**		**-**		**M6**	**M8**	**-**		**-**		**M10**	**M12**	**-**		**-**	
						11x85						**15x85**					
Perforated sleeve FIS H K		**12x50**		**12x85**		**16x85**				**16x130**		**20x85**				**20x130**	
Tensile load N_{Rk} [kN] depending on the compressive strength f_b (temperature range 50/80°C)																	
compressive strength f_b	use category																
2 N/mm²	w/w	w/d	-[1]		0,5		0,5			0,4		0,5				0,4	
	d/d		0,3		0,5		0,5			0,5		0,5				0,5	
4 N/mm²	w/w	w/d	0,5		0,9		0,9			0,9		0,9				0,9	
	d/d		0,6		0,9		0,9			0,9		0,9				0,9	
6 N/mm²	w/w	w/d	0,75		1,5		1,5			1,2		1,5				1,2	
	d/d		0,9		1,5		1,5			1,5		1,5				1,5	

[1] No performance assessed

Table C73.2: Characteristic resistance under tensile load (Push through anchorage)

Anchor rod		**M10**	**M12**	**M16**
Perforated sleeve FIS H K		**18x130/200**		**22x130/200**
Tensile load N_{Rk} [kN] depending on the compressive strength f_b (temperature range 50/80°C)				
compressive strength f_b	use category			
2 N/mm²	w/w w/d	0,4		
	d/d	0,5		
4 N/mm²	w/w w/d	0,9		
	d/d	0,9		
6 N/mm²	w/w w/d	1,2		
	d/d	1,5		

Factor for job site tests and displacements see annex C110

Factor for temperature range 72/120°C: 0,83

Vertical perforated brick HLz, EN 771-1

Table C74.1: Characteristic resistance under shear load (Pre-positioned anchorage)

Anchor rod	**M6**	**M8**	**M6**	**M8**	**-**		**M8**	**M10**	**M8**	**M10**	**-**		**M12**	**M16**	**M12**	**M16**
Internal threaded anchor FIS E	**-**		**-**		**M6**	**M8**	**-**		**-**		**M10**	**M12**	**-**		**-**	
					11x85						**15x85**					
Perforated sleeve FIS H K	**12x50**		**12x85**		**16x85**				**16x130**		**20x85**				**20x130**	
Shear load V_{Rk} [kN] depending on the compressive strength f_b (temperature range 50/80°C and 72/120°C)																
compressive strength f_b	use category															
2 N/mm²	w/w	w/d			0,5						0,6					
	d/d															
4 N/mm²	w/w	w/d			0,9						1,2					
	d/d															
6 N/mm²	w/w	w/d			1,5						1,5					
	d/d															

Table C74.2: Characteristic resistance under shear load (Push through anchorage)

Anchor rod	**M10**	**M12**	**M16**
Perforated sleeve FIS H K	**18x130/200**		**22x130/200**
Shear load V_{Rk} [kN] depending on the compressive strength f_b (temperature range 50/80°C and 72/120°C)			
compressive strength f_b	use category		
2 N/mm²	w/w w/d d/d	0,5	0,6
4 N/mm²	w/w w/d d/d	0,9	1,2
6 N/mm²	w/w w/d d/d	1,5	1,5

Factor for job site tests and displacements see annex C110

Vertical perforated brick HLz, Porotherm W 44, filled with mineral wool, EN 771-1

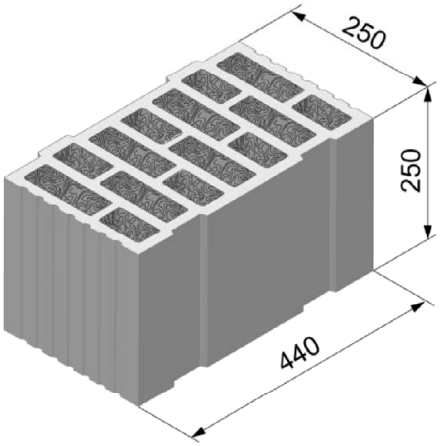

Vertical perforated brick HLz, Porotherm W 44, filled with mineral wool, EN 771-1			
Producer	-		
Nominal dimensions [mm]	length L	width W	height H
	250	440	250
Density ρ [kg/dm³]	0,7		
Compressive strength f_b [N/mm²]	6 / 8 / 10		
Standard or annex	EN 771-1		

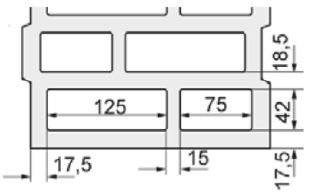

Table C75.1: Installation parameters
(Pre-positioned anchorage with perforated sleeve FIS H K)

Anchor rod	**M6**	**M8**	**M6**	**M8**	**-**		**M8**	**M10**	**M8**	**M10**	**-**		**M12**	**M16**	**M12**	**M16**	**M12**	**M16**
Internal threaded anchor FIS E	**-**		**-**		**M6**	**M8**	**-**		**-**		**M10**	**M12**	**-**		**-**		**-**	
					11x85						**15x85**							
Perforated sleeve FIS H K	**12x50**		**12x85**		**16x85**				**16x130**		**20x85**				**20x130**		**20x200**	
Anchor rod and internal threaded anchor FIS E with perforated sleeve FIS H K																		
Max. installation torque T_{inst} [Nm]	2						5		2		5		6					
General installation parameters																		
Edge distance c_{min} [mm]	60																	
Spacing s_{min} ∥ [mm]	80																	
Spacing s_{cr} ∥ [mm]	250																	
Spacing s_{min} ⊥ [mm]	80																	
Spacing s_{cr} ⊥ [mm]	250																	
Drilling method																		
Rotary drilling with carbide drill																		

Table C75.2: Group factors

Anchor rod	**M6**	**M8**	**M6**	**M8**	**-**		**M8**	**M10**	**M8**	**M10**	**-**		**M12**	**M16**	**M12**	**M16**	**M12**	**M16**
Internal threaded anchor FIS E	**-**		**-**		**M6**	**M8**	**-**		**-**		**M10**	**M12**	**-**		**-**		**-**	
					11x85						**15x85**							
Perforated sleeve FIS H K	**12x50**		**12x85**		**16x85**				**16x130**		**20x85**				**20x130**		**20x200**	
Group factors $\alpha_{g,N}$ ∥ [-]	1,3																	
Group factors $\alpha_{g,V}$ ∥ [-]	1,3																	
Group factors $\alpha_{g,N}$ ⊥ [-]	0,8																	
Group factors $\alpha_{g,V}$ ⊥ [-]	1,3																	

fischer injection system FIS V for masonry

Performance
Vertical perforated brick HLz, Porotherm W 44, filled with mineral wool;
dimensions, installation parameters

Annex C 75

Appendix 96/ 131

Vertical perforated brick HLz, Porotherm W 44, filled with mineral wool, EN 771-1

Table C76.1: Installation parameters
(Push through anchorage with perforated sleeve FIS H K)

Anchor rod			**M10**	**M12**	**M16**
Perforated sleeve FIS H K			**18x130/200**		**22x130/200**
Anchor rod with perforated sleeve FIS H K					
Max. installation torque	T_{inst}	[Nm]	5	6	
General installation parameters					
Edge distance	c_{min}	[mm]	60		
Spacing	s_{min} ∥		80		
	s_{cr} ∥		250		
	s_{min} ⊥		80		
	s_{cr} ⊥		250		
Drilling method					
Rotary drilling with carbide drill					

Table C76.2: Group factors

Anchor rod			**M10**	**M12**	**M16**
Perforated sleeve FIS H K			**18x130/200**		**22x130/200**
Group factors	$\alpha_{g,N}$ ∥	[-]	1,3		
	$\alpha_{g,V}$ ∥		1,3		
	$\alpha_{g,N}$ ⊥		0,8		
	$\alpha_{g,V}$ ⊥		1,3		

Vertical perforated brick HLz, Porotherm W 44, filled with mineral wool, EN 771-1

Table C77.1: Characteristic resistance under tensile load (Pre-positioned anchorage)

Anchor rod		**M6**	**M8**	**M6**	**M8**	**-**	**M8**	**M10**	**M8**	**M10**	**-**	**M12**	**M16**	**M12**	**M16**	**M12**	**M16**
Internal threaded anchor FIS E		**-**		**-**		**M6** / **11x85**	**M8**	**-**	**-**		**M10** / **15x85**	**M12**	**-**		**-**		**-**
Perforated sleeve FIS H K		**12x50**		**12x85**		**16x85**			**16x130**		**20x85**			**20x130**		**20x200**	
Tensile load N_{Rk} [kN] depending on the compressive strength f_b (temperature range 50/80°C)																	
compressive strength f_b	use category																
6 N/mm²	w/w w/d	0,75		1,5		1,2			1,5					2,5			
	d/d	0,9		1,5		1,2			1,5					2,5			
8 N/mm²	w/w w/d	0,9		1,5		1,2			1,5					2,5			
	d/d	0,9		2,0		1,5			2,0					3,0			
10 N/mm²	w/w w/d	0,9		2,0		1,5			2,0					3,0			
	d/d	1,2		2,0		1,5			2,0					3,5			

Table C77.2: Characteristic resistance under tensile load (Push through anchorage)

Anchor rod	**M10**	**M12**	**M16**
Perforated sleeve FIS H K	**18x130/200**		**22x130/200**
Tensile load N_{Rk} [kN] depending on the compressive strength f_b (temperature range 50/80°C)			
compressive strength f_b / use category			
6 N/mm² w/w w/d	1,5		
d/d	1,5		
8 N/mm² w/w w/d	1,5		
d/d	2,0		
10 N/mm² w/w w/d	2,0		
d/d	2,0		

Factor for job site tests and displacements see annex C110

Factor for temperature range 72/120°C: 0,83

Vertical perforated brick HLz, Porotherm W 44, filled with mineral wool, EN 771-1

Table C78.1: Characteristic resistance under shear load (Pre-positioned anchorage)

Anchor rod	**M6**	**M8**	**M6**	**M8**	**-**		**M8**	**M10**	**M8**	**M10**	**-**		**M12**	**M16**	**M12**	**M16**	**M12**	**M16**
Internal threaded anchor FIS E	**-**		**-**		**M6** / **11x85**	**M8** / **11x85**	**-**		**-**		**M10** / **15x85**	**M12** / **15x85**	**-**		**-**		**-**	
Perforated sleeve FIS H K	**12x50**		**12x85**		**16x85**				**16x130**		**20x85**				**20x130**		**20x200**	
Shear load V_{Rk} [kN] depending on the compressive strength f_b (temperature range 50/80°C and 72/120°C)																		
compressive strength f_b	use category																	
6 N/mm²	w/w, w/d, d/d				0,9				1,2		0,9				1,2		1,2	
8 N/mm²	w/w, w/d, d/d				0,9				1,5		0,9				1,5		1,2	
10 N/mm²	w/w, w/d, d/d				1,2				1,5		1,2				1,5		1,5	

Table C78.2: Characteristic resistance under shear load (Push through anchorage)

Anchor rod	**M10**	**M12**	**M16**
Perforated sleeve FIS H K	**18x130/200**		**22x130/200**
Shear load V_{Rk} [kN] depending on the compressive strength f_b (temperature range 50/80°C and 72/120°C)			
compressive strength f_b	use category		
6 N/mm²	w/w, w/d, d/d	1,2	1,2
8 N/mm²	w/w, w/d, d/d	1,5	1,5
10 N/mm²	w/w, w/d, d/d	1,5	1,5

Factor for job site tests and displacements see annex C110

Vertical perforated brick HLz, EN 771-1

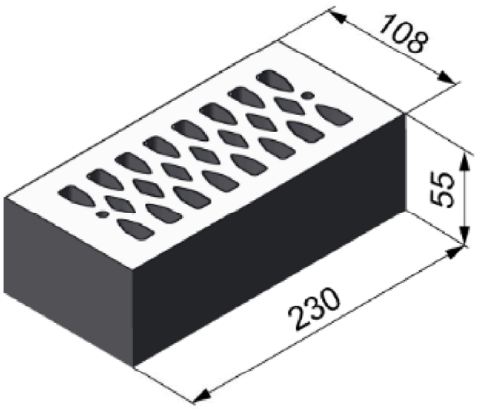

Vertical perforated brick HLz, EN 771-1			
Producer	e.g. Wienerberger.		
Nominal dimensions [mm]	length L	width W	height H
	230	108	55
Density ρ [kg/dm³]	≥ 1,4		
Compressive strength f_b [N/mm²]	2 / 4 / 6 / 8		
Standard or annex	EN 771-1		

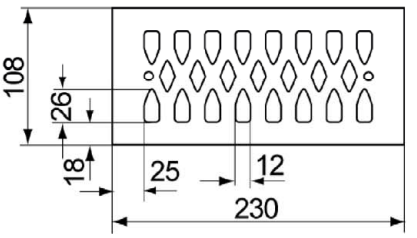

Table C79.1: Installation parameters

Anchor rod		**M6**	**M8**	**M6**	**M8**	**-**		**M8**	**M10**	**-**		**M12**	**M16**
Internal threaded anchor FIS E		**-**		**-**		**M6**	**M8**	**-**		**M10**	**M12**	**-**	
						11x85				**15x85**			
Perforated sleeve FIS H K		**12x50**		**12x85**		**16x85**				**20x85**			
Anchor rod and internal threaded anchor FIS E with perforated sleeve FIS H K													
Max. installation torque	T_{inst}	[Nm]	2										
General installation parameters													
Edge distance	c_{min}	[mm]	60										
Spacing	s_{min} ∥		80										
	s_{cr} ∥		230										
	s_{min} ⊥		60										
	s_{cr} ⊥		60										
Drilling method													
Hammer drilling with hard metal hammer drill													

Table C79.2: Group factors

Anchor rod		**M6**	**M8**	**M6**	**M8**	**-**		**M8**	**M10**	**-**		**M12**	**M16**
Internal threaded anchor FIS E		**-**		**-**		**M6**	**M8**	**-**		**M10**	**M12**	**-**	
						11x85				**15x85**			
Perforated sleeve FIS H K		**12x50**		**12x85**		**16x85**				**20x85**			
Group factors	$\alpha_{g,N}$ ∥	[-]	2										
	$\alpha_{g,V}$ ∥												
	$\alpha_{g,N}$ ⊥												
	$\alpha_{g,V}$ ⊥												

fischer injection system FIS V for masonry

Performance
Vertical perforated brick HLz, dimensions, installation parameters

Annex C 79

Appendix 100/ 131

Vertical perforated brick HLz, EN 771-1

Table C80.1: Characteristic resistance under tensile load [1)]

Anchor rod		M6	M8	M6	M8	-		M8	M10	-		M12	M16
Internal threaded anchor FIS E		-		-		M6	M8	-		M10	M12	-	
						11x85				15x85			
Perforated sleeve FIS H K		12x50		12x85		16x85				20x85			
Tensile load N_{Rk} [kN] depending on the compressive strength f_b (temperature range 50/80°C)													
compressive strength f_b	use category												
2 N/mm²	w/w w/d	0,3		0,9		0,75				0,5			
	d/d	0,3		0,9		0,9				0,6			
4 N/mm²	w/w w/d	0,6		1,5		1,5				0,9			
	d/d	0,75		2,0		1,5				1,2			
6 N/mm²	w/w w/d	0,9		2,5		2,5				1,5			
	d/d	0,9		3,0		2,5				1,5			
8 N/mm²	w/w w/d	1,2		3,5		3,0				2,0			
	d/d	1,5		4,0		3,5				2,5			

[1)] If the fixing is in a solid area, for w/w, the characteristic value shall be reduced with the factor 0,64.

Factor for temperature range 72/120°C: 0,83

Table C80.2: Characteristic resistance under shear load

Anchor rod		M6	M8	M6	M8	-		M8	M10	-		M12	M16
Internal threaded anchor FIS E		-		-		M6	M8	-		M10	M12	-	
						11x85				15x85			
Perforated sleeve FIS H K		12x50		12x85		16x85				20x85			
Shear load V_{Rk} [kN] depending on the compressive strength f_b (temperature range 50/80°C and 72/120°C)													
compressive strength f_b	use category												
2 N/mm²	w/w w/d	0,6								0,4			
	d/d												
4 N/mm²	w/w w/d	1,2								0,9			
	d/d												
6 N/mm²	w/w w/d	1,5								1,2			
	d/d												
8 N/mm²	w/w w/d	2,5								1,5			
	d/d												

Factor for job site tests and displacements see annex C110

fischer injection system FIS V for masonry

Performance
Vertical perforated brick HLz, Characteristic resistance under tensile and shear load

Annex C 80

Appendix 101/ 131

Horizontal perforated brick LLz, EN 771-1

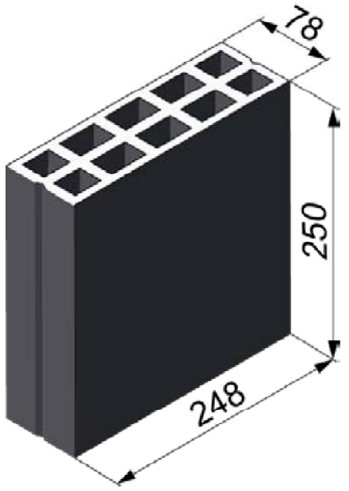

Horizontal perforated brick LLz, EN 771-1			
Producer	-		
Nominal dimensions [mm]	length L	width W	height H
	250	78	248
Density ρ [kg/dm³]	≥ 0,7		
Compressive strength f_b [N/mm²]	2 / 4 / 6		
Standard or annex	EN 771-1		

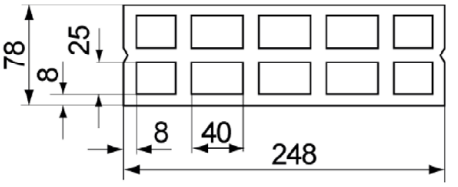

Table C81.1: Installation parameters

Anchor rod			**M6**	**M8**
Perforated sleeve FIS H K			**12x50**	
Anchor rod with perforated sleeve FIS H K				
Max. installation torque	T_{inst}	[Nm]	2	
General installation parameters				
Edge distance	c_{min}	[mm]	100	
Spacing	s_{min} ∥	[mm]	75	
	s_{cr} ∥	[mm]	250	
	s_{min} ⊥ = s_{cr} ⊥	[mm]	250	
Drilling method				
Hammer drilling with hard metal hammer drill				

Table C81.2: Group factors

Anchor rod			**M6**	**M8**
Perforated sleeve FIS H K			**12x50**	
Group factors	$\alpha_{g,N}$ ∥	[-]	1,6	
	$\alpha_{g,V}$ ∥	[-]	1,1	
	$\alpha_{g,N}$ ⊥	[-]	2,0	
	$\alpha_{g,V}$ ⊥	[-]		

Horizontal perforated brick LLz, EN 771-1

Table C82.1: Characteristic resistance under tensile load

Anchor rod		**M6**	**M8**
Perforated sleeve FIS H K		**12x50**	
Tensile load N_{Rk} [kN] depending on the compressive strength f_b (temperature range 50/80°C)			
compressive strength f_b	use category		
2 N/mm²	w/w w/d	0,5	
	d/d	0,6	
4 N/mm²	w/w w/d	0,9	
	d/d	1,2	
6 N/mm²	w/w w/d	1,5	
	d/d	1,5	

Factor for temperature range 72/120°C: 0,83

Table C82.2: Characteristic resistance under shear load

Anchor rod		**M6**	**M8**
Perforated sleeve FIS H K		**12x50**	
Shear load V_{Rk} [kN] depending on the compressive strength f_b (temperature range 50/80°C and 72/120°C)			
compressive strength f_b	use category		
2 N/mm²	w/w w/d d/d	0,5	
4 N/mm²	w/w w/d d/d	0,9	
6 N/mm²	w/w w/d d/d	1,5	

Factor for job site tests and displacements see annex C110

Horizontal perforated brick LLz, EN 771-1

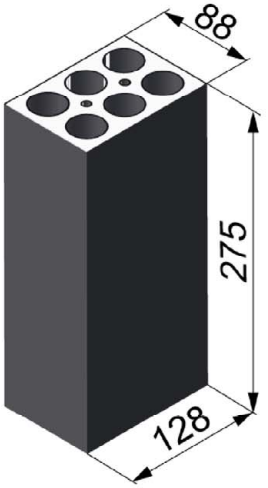

Horizontal perforated brick LLz, EN 771-1			
Producer	e.g. Cermanica Farreny S.A.		
Nominal dimensions [mm]	length L	width W	height H
	275	88	128
Density ρ [kg/dm³]	≥ 0,8		
Compressive strength f_b [N/mm²]	2		
Standard or annex	EN 771-1		

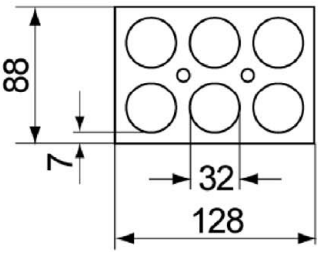

Table C83.1: Installation parameters

Anchor rod			M6	M8
Perforated sleeve FIS H K			**12x50**	
Anchor rod with perforated sleeve FIS H K				
Max. installation torque	T_{inst}	[Nm]	2	
General installation parameters				
Edge distance	c_{min}	[mm]	60	
Spacing	s_{min} ∥	[mm]	75	
	s_{cr} ∥	[mm]	275	
	s_{min} ⊥	[mm]	75	
	s_{cr} ⊥	[mm]	130	
Drilling method				
Hammer drilling with hard metal hammer drill				

Table C83.2: Group factors

Anchor rod			M6	M8
Perforated sleeve FIS H K			**12x50**	
Group factors	$\alpha_{g,N}$ ∥	[-]	1,3	
	$\alpha_{g,V}$ ∥	[-]	1,5	
	$\alpha_{g,N}$ ⊥	[-]	1,3	
	$\alpha_{g,V}$ ⊥	[-]	1,5	

Horizontal perforated brick LLz, EN 771-1

Table C84.1: Characteristic resistance under tensile load

Anchor rod		**M6**	**M8**
Perforated sleeve FIS H K		**12x50**	
Tensile load N_{Rk} [kN] depending on the compressive strength f_b (temperature range 50/80°C)			
compressive strength f_b	use category		
2 N/mm²	w/w, w/d, d/d	1,5	

Factor for temperature range 72/120°C: 0,83

Table C84.2: Characteristic resistance under shear load

Anchor rod		**M6**	**M8**
Perforated sleeve FIS H K		**12x50**	
Shear load V_{Rk} [kN] depending on the compressive strength f_b (temperature range 50/80°C and 72/120°C)			
compressive strength f_b	use category		
2 N/mm²	w/w, w/d, d/d	1,2	

Factor for job site tests and displacements see annex C110

Light-weight concrete hollow block Hbl, EN 771-3

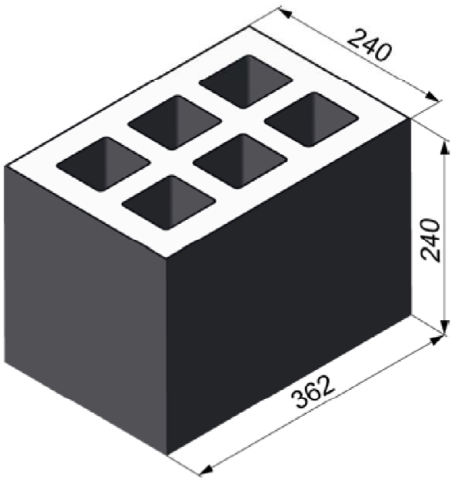

Light-weight concrete hollow block Hbl, EN 771-3				
Producer		-		
Nominal dimensions [mm]		Länge L	Breite B	Höhe H
		362	240	240
Density ρ	[kg/dm³]	≥ 1,0		
Compressive strength f_b	[N/mm²]	2 / 4		
Standard or annex		EN 771-3		

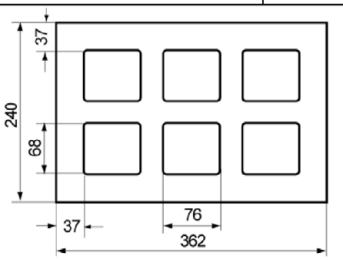

Table C85.1: Installation parameters
(Pre-positioned anchorage with perforated sleeve FIS H K)

Anchor rod		**M6**	**M8**	**M6**	**M8**	**-**		**M8**	**M10**	**M8**	**M10**	**-**		**M12**	**M16**	**M12**	**M16**	**M12**	**M16**
Internal threaded anchor FIS E		**-**		**-**		**M6**	**M8**	**-**		**-**		**M10**	**M12**	**-**		**-**		**-**	
						11x85						**15x85**							
Perforated sleeve FIS H K		**12x50**		**12x85**		**16x85**				**16x130**		**20x85**				**20x130**		**20x200**	
Anchor rod and internal threaded anchor FIS E with perforated sleeve FIS H K																			
Max. installation torque	T_{inst}	[Nm]	2																
General installation parameters																			
Edge distance	c_{min}	[mm]	60																
Spacing	s_{min} ∥		100																
	s_{cr} ∥		362																
	s_{min} ⊥ = s_{cr} ⊥		240																
Drilling method																			
Hammer drilling with hard metal hammer drill																			

Table C85.2: Group factors

Anchor rod		**M6**	**M8**	**M6**	**M8**	**-**		**M8**	**M10**	**M8**	**M10**	**-**		**M12**	**M16**	**M12**	**M16**	**M12**	**M16**
Internal threaded anchor FIS E		**-**		**-**		**M6**	**M8**	**-**		**-**		**M10**	**M12**	**-**		**-**		**-**	
						11x85						**15x85**							
Perforated sleeve FIS H K		**12x50**		**12x85**		**16x85**				**16x130**		**20x85**				**20x130**		**20x200**	
Group factors	$\alpha_{g,N}$ ∥	[-]	1,2																
	$\alpha_{g,V}$ ∥		1,1																
	$\alpha_{g,N}$ ⊥		2,0																
	$\alpha_{g,V}$ ⊥																		

Light-weight concrete hollow block Hbl, EN 771-3

Table C86.1: Installation parameters
(Push through anchorage with perforated sleeve FIS H K)

Anchor rod			**M10**	**M12**	**M16**
Perforated sleeve FIS H K			**18x130/200**		**22x130/200**
Anchor rod with perforated sleeve FIS H K					
Max. installation torque	T_{inst}	[Nm]	2		
General installation parameters					
Edge distance	c_{min}	[mm]	60		
Spacing	s_{min} ∥	[mm]	100		
	s_{cr} ∥	[mm]	362		
	s_{min} ⊥ = s_{cr} ⊥	[mm]	240		
Drilling method					
Hammer drilling with hard metal hammer drill					

Table C86.2: Group factors

Anchor rod			**M10**	**M12**	**M16**
Perforated sleeve FIS H K			**18x130/200**		**22x130/200**
Group factors	$\alpha_{g,N}$ ∥	[-]	1,2		
	$\alpha_{g,V}$ ∥	[-]	1,1		
	$\alpha_{g,N}$ ⊥	[-]	2,0		
	$\alpha_{g,V}$ ⊥	[-]			

Light-weight concrete hollow block Hbl, EN 771-3

Table C87.1: Characteristic resistance under tensile load (Pre-positioned anchorage)

Anchor rod			**M6**	**M8**	**M6**	**M8**	**-**		**M8**	**M10**	**M8**	**M10**	**-**		**M12**	**M16**	**M12**	**M16**	**M12**	**M16**
Internal threaded anchor FIS E			**-**		**-**		**M6**	**M8**	**-**		**-**		**M10**	**M12**	**-**		**-**		**-**	
							11x85						**15x85**							
Perforated sleeve FIS H K			**12x50**		**12x85**		**16x85**				**16x130**		**20x85**				**20x130**		**20x200**	
Tensile load N_{Rk} [kN] depending on the compressive strength f_b (temperature range 50/80°C)																				
compressive strength f_b	use category																			
2 N/mm²	w/w	w/d	1,2		1,5														2,5	
	d/d		1,2		1,5														2,5	
4 N/mm²	w/w	w/d	2,0		3,0														5,0	
	d/d		2,5		3,0														5,5	

Table C87.2: Characteristic resistance under tensile load (Push through anchorage)

Anchor rod			**M10**	**M12**	**M16**
Perforated sleeve FIS H K			**18x130/200**		**22x130/200**
Tensile load N_{Rk} [kN] depending on the compressive strength f_b (temperature range 50/80°C)					
compressive strength f_b	use category				
2 N/mm²	w/w	w/d	1,5		
	d/d		1,5		
4 N/mm²	w/w	w/d	3,0		
	d/d		3,0		

Factor for job site tests and displacements see annex C110

Factor for temperature range 72/120°C: 0,83

Light-weight concrete hollow block Hbl, EN 771-3

Table C88.1: Characteristic resistance under shear load (Pre-positioned anchorage)

Anchor rod	**M6**	**M8**	**M6**	**M8**	**-**	**M8**	**M10**	**M8**	**M10**	**-**	**M12**	**M16**	**M12**	**M16**	**M12**	**M16**
Internal threaded anchor FIS E	**-**		**-**		**M6** **M8** **11x85**	**-**		**-**		**M10** **M12** **15x85**	**-**		**-**		**-**	
Perforated sleeve FIS H K	**12x50**		**12x85**		**16x85**			**16x130**		**20x85**			**20x130**		**20x200**	
Shear load V_{Rk} [kN] depending on the compressive strength f_b (temperature range 50/80°C and 72/120°C)																
compressive strength f_b	use category															
2 N/mm²	w/w	w/d														
	d/d				0,9											
4 N/mm²	w/w	w/d														
	d/d				2,0											

Table C88.2: Characteristic resistance under shear load (Push through anchorage)

Anchor rod	**M10**	**M12**	**M16**
Perforated sleeve FIS H K	**18x130/200**		**22x130/200**
Shear load V_{Rk} [kN] depending on the compressive strength f_b (temperature range 50/80°C and 72/120°C)			
compressive strength f_b	use category		
2 N/mm²	w/w w/d d/d	0,9	
4 N/mm²	w/w w/d d/d	2,0	

Factor for job site tests and displacements see annex C110

Light-weight concrete hollow block Hbl, EN 771-3

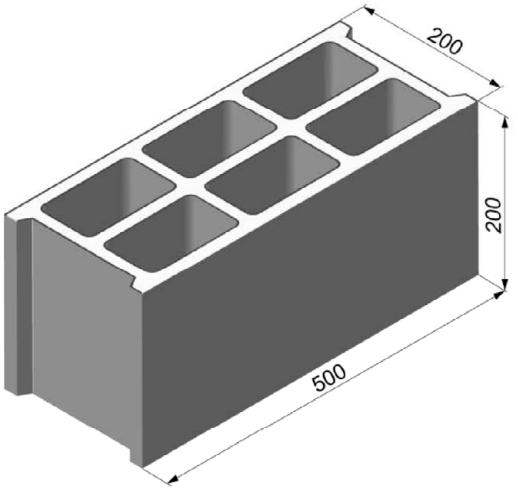

Light-weight concrete hollow block Hbl, EN 771-3			
Producer	e.g. Sepa		
Nominal dimensions [mm]	length L	width W	height H
	500	200	200
Density ρ [kg/dm³]	≥ 1,0		
Compressive strength f_b [N/mm²]	2 / 4 / 6		
Standard or annex	EN 771-1		

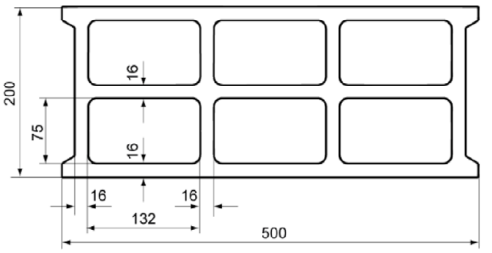

Table C89.1: Installation parameters

Anchor rod	M6	M8	M6	M8	-	M8	M10	M8	M10	M10	M12	-	M12	M16
Internal threaded anchor FIS E	-		-		M6 M8 11x85	-		-		-		M10 M12 15x85	-	
Perforated sleeve FIS H K	12x50		12x85		16x85			16x130		18x130/200		20x85		
Anchor rod and internal threaded anchor FIS E with perforated sleeve FIS H K														
Max. installation torque T_{inst} [Nm]	1				2									
General installation parameters														
Edge distance c_{min} [mm]	100													
Spacing s_{min} II = s_{cr} II [mm]	500													
Spacing s_{min} ⊥ = s_{cr} ⊥ [mm]	200													
Drilling method														
Hammer drilling with hard metal hammer drill														

Table C89.2: Group factors

Anchor rod	M6	M8	M6	M8	-	M8	M10	M8	M10	M10	M12	-	M12	M16
Internal threaded anchor FIS E	-		-		M6 M8 11x85	-		-		-		M10 M12 15x85	-	
Perforated sleeve FIS H K	12x50		12x85		16x85			16x130		18x130/200		20x85		
Group factors $\alpha_{g,N}$ II, $\alpha_{g,V}$ II, $\alpha_{g,N}$ ⊥, $\alpha_{g,V}$ ⊥ [-]	2													

Light-weight concrete hollow block Hbl, EN 771-3

Table C90.1: Characteristic resistance under tensile load

Anchor rod	**M6**	**M8**	**M6**	**M8**	**-**	**M8**	**M10**	**M8**	**M10**	**M10**	**M12**	**-**	**M12**	**M16**
Internal threaded anchor FIS E	**-**		**-**		**M6** / **11x85**	**M8** / **11x85**	**-**	**-**		**-**		**M10** / **15x85**	**M12** / **15x85**	**-**
Perforated sleeve FIS H K	**12x50**		**12x85**		**16x85**			**16x130**		**18x130/200**		**20x85**		

Tensile load N_{Rk} [kN] depending on the compressive strength f_b (temperature range 50/80°C)			
compressive strength f_b	use category		
2 N/mm²	w/w	w/d	0,4
	d/d		0,5
4 N/mm²	w/w	w/d	0,9
	d/d		0,9
6 N/mm²	w/w	w/d	1,2
	d/d		1,5

Factor for temperature range 72/120°C: 0,83

Table C90.2: Characteristic resistance under shear load

Anchor rod	**M6**	**M8**	**M6**	**M8**	**-**	**M8**	**M10**	**M8**	**M10**	**M10**	**M12**	**-**	**M12**	**M16**
Internal threaded anchor FIS E	**-**		**-**		**M6** / **11x85**	**M8** / **11x85**	**-**	**-**		**-**		**M10** / **15x85**	**M12** / **15x85**	**-**
Perforated sleeve FIS H K	**12x50**		**12x85**		**16x85**			**16x130**		**18x130/200**		**20x85**		

Shear load V_{Rk} [kN] depending on the compressive strength f_b (temperature range 50/80°C and 72/120°C)			
compressive strength f_b	use category		
2 N/mm²	w/w	w/d	0,9
	d/d		
4 N/mm²	w/w	w/d	1,5
	d/d		
6 N/mm²	w/w	w/d	2,5
	d/d		

Factor for job site tests and displacements see annex C110

Light-weight concrete hollow block Hbl, EN 771-3

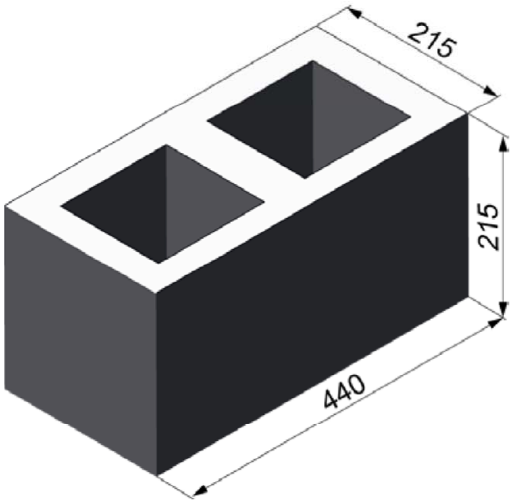

Light-weight concrete hollow block Hbl, EN 771-3			
Producer	e.g. Roadstone wood		
Nominal dimensions [mm]	length L	width W	height H
	440	215	215
Density ρ [kg/dm³]	≥ 1,2		
Compressive strength f_b [N/mm²]	4 / 6 / 8 / 10		
Standard or annex	EN 771-3		

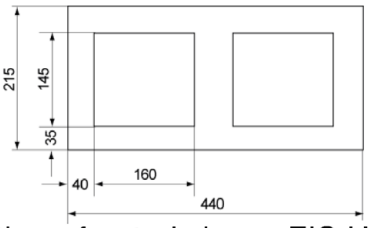

Table C91.1: Installation parameters
(Pre-positioned anchorage with perforated sleeve FIS H K)

Anchor rod	**M6**	**M8**	**M6**	**M8**	**-**	**M8**	**M10**	**M8**	**M10**	**-**	**M12**	**M16**	**M12**	**M16**
Internal threaded anchor FIS E	**-**		**-**		**M6 M8** / **11x85**	**-**		**-**		**M10 M12** / **15x85**	**-**		**-**	
Perforated sleeve FIS H K	**12x50**		**12x85**		**16x85**			**16x130**		**20x85**			**20x130**	
Anchor rod and internal threaded anchor FIS E with perforated sleeve FIS H K														
Max. installation torque	T_{inst}	[Nm]	2											
General installation parameters														
Edge distance	c_{min}	[mm]	110											
Spacing	s_{min} ∥		100											
	s_{cr} ∥		440											
	s_{min} ⊥		100											
	s_{cr} ⊥		215											
Drilling method														
Hammer drilling with hard metal hammer drill														

Table C91.2: Group factors

Anchor rod	**M6**	**M8**	**M6**	**M8**	**-**	**M8**	**M10**	**M8**	**M10**	**-**	**M12**	**M16**	**M12**	**M16**
Internal threaded anchor FIS E	**-**		**-**		**M6 M8** / **11x85**	**-**		**-**		**M10 M12** / **15x85**	**-**		**-**	
Perforated sleeve FIS H K	**12x50**		**12x85**		**16x85**			**16x130**		**20x85**			**20x130**	
Group factors	$\alpha_{g,N}$ ∥	[-]	1,4											
	$\alpha_{g,V}$ ∥		2,0											
	$\alpha_{g,N}$ ⊥		1,4											
	$\alpha_{g,V}$ ⊥		1,2											

Light-weight concrete hollow block Hbl, EN 771-3

Table C92.1: Installation parameters
(Push through anchorage with perforated sleeve FIS H K)

Anchor rod			**M10**	**M12**	**M16**
Perforated sleeve FIS H K			**18x130/200**		**22x130/200**
Anchor rod with perforated sleeve FIS H K					
Max. installation torque	T_{inst}	[Nm]	2		
General installation parameters					
Edge distance	c_{min}	[mm]	110		
Spacing	s_{min} ∥		100		
	s_{cr} ∥		440		
	s_{min} ⊥		100		
	s_{cr} ⊥		215		
Drilling method					
Hammer drilling with hard metal hammer drill					

Table C92.2: Group factors

Anchor rod			**M10**	**M12**	**M16**
Perforated sleeve FIS H K			**18x130/200**		**22x130/200**
Group factors	$\alpha_{g,N}$ ∥	[-]	1,4		
	$\alpha_{g,V}$ ∥		2,0		
	$\alpha_{g,N}$ ⊥		1,4		
	$\alpha_{g,V}$ ⊥		1,2		

Light-weight concrete hollow block Hbl, EN 771-3

Table C93.1: Characteristic resistance under tensile load (Pre-positioned anchorage)

Anchor rod		**M6**	**M8**	**M6**	**M8**	**-**		**M8**	**M10**	**M8**	**M10**	**-**		**M12**	**M16**	**M12**	**M16**
Internal threaded anchor FIS E		**-**		**-**		**M6**	**M8**	**-**		**-**		**M10**	**M12**	**-**		**-**	
						11x85						**15x85**					
Perforated sleeve FIS H K		**12x50**		**12x85**		**16x85**				**16x130**		**20x85**				**20x130**	
Tensile load N_{Rk} [kN] depending on the compressive strength f_b (temperature range 50/80°C)																	
compressive strength f_b	use category																
4 N/mm²	w/w w/d	0,9				1,2						2,0					
	d/d	1,2				1,5						2,0					
6 N/mm²	w/w w/d	1,5				2,0						3,0					
	d/d	1,5				2,0						3,0					
8 N/mm²	w/w w/d	2,0				2,5						3,5					
	d/d	2,0				3,0						4,0					
10 N/mm²	w/w w/d	2,5				3,0						4,5					
	d/d	3,0				3,5						5,0					

Table C93.2: Characteristic resistance under tensile load (Push through anchorage)

Anchor rod		**M10**	**M12**	**M16**
Perforated sleeve FIS H K		**18x130/200**		**22x130/200**
Tensile load N_{Rk} [kN] depending on the compressive strength f_b (temperature range 50/80°C)				
compressive strength f_b	use category			
4 N/mm²	w/w w/d	1,2		2,0
	d/d	1,5		2,0
6 N/mm²	w/w w/d	2,0		3,0
	d/d	2,0		3,0
8 N/mm²	w/w w/d	2,5		3,5
	d/d	3,0		4,0
10 N/mm²	w/w w/d	3,0		4,5
	d/d	3,5		5,0

Factor for job site tests and displacements see annex C110

Factor for temperature range 72/120°C: 0,83

Light-weight concrete hollow block Hbl, EN 771-3

Table C94.1: Characteristic resistance under shear load (Pre-positioned anchorage)

Anchor rod		**M6**	**M8**	**M6**	**M8**	**-**		**M8**	**M10**	**M8**	**M10**	**-**		**M12**	**M16**	**M12**	**M16**
Internal threaded anchor FIS E		**-**		**-**		**M6**	**M8**	**-**		**-**		**M10**	**M12**	**-**		**-**	
						11x85						**15x85**					
Perforated sleeve FIS H K		**12x50**		**12x85**		**16x85**				**16x130**		**20x85**				**20x130**	
Shear load V_{Rk} [kN] depending on the compressive strength f_b (temperature range 50/80°C and 72/120°C)																	
compressive strength f_b	use category																
4 N/mm²	w/w w/d d/d	0,75	1,2	0,75	1,2	0,75	1,2										
6 N/mm²	w/w w/d d/d	1,2	2,0	1,2	2,0	1,2	2,0										
8 N/mm²	w/w w/d d/d	1,5	2,5	1,5	2,5	1,5	2,5										
10 N/mm²	w/w w/d d/d	2,0	3,0	2,0	3,0	2,0	3,0										

Table C94.2: Characteristic resistance under shear load (Push through anchorage)

Anchor rod		**M10**	**M12**	**M16**
Perforated sleeve FIS H K		**18x130/200**		**22x130/200**
Shear load V_{Rk} [kN] depending on the compressive strength f_b (temperature range 50/80°C and 72/120°C)				
compressive strength f_b	use category			
4 N/mm²	w/w w/d d/d	1,2		
6 N/mm²	w/w w/d d/d	2,0		
8 N/mm²	w/w w/d d/d	2,5		
10 N/mm²	w/w w/d d/d	3,0		

Factor for job site tests and displacements see annex C110

Light-weight concrete solid block Vbl, EN 771-3

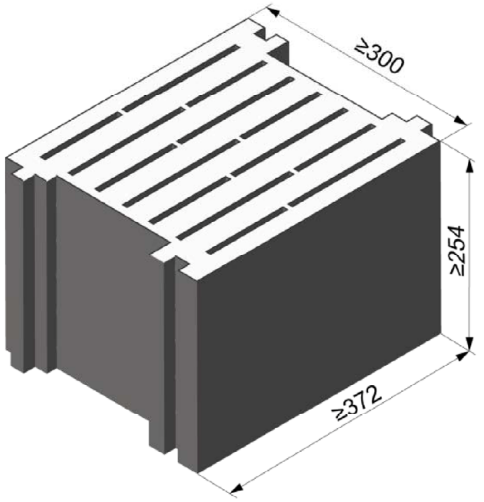

Light-weight concrete solid block Vbl, EN 771-3			
Producer	e.g. Sepa		
Nominal dimensions [mm]	length L	width W	height H
	≥ 372	≥ 300	≥ 254
Density ρ [kg/dm³]	≥ 0,6		
Compressive strength f_b [N/mm²]	2		
Standard or annex	EN 771-3		

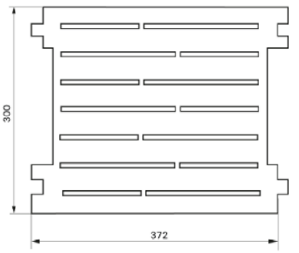

Table C95.1: Installation parameters

Anchor rod			M8	M10	M10	M12	M12	M16	M16	M12	M16
Perforated sleeve FIS H K			16x130		18x130/200		20x130		22x130/200	20x200	
Anchor rod with perforated sleeve FIS H K											
Max. installation torque	T_{inst}	[Nm]	4								
General installation parameters											
Edge distance	c_{min}	[mm]	130								
Spacing	s_{min} ∥ = s_{cr} ∥	[mm]	370								
	s_{min} ⊥ = s_{cr} ⊥	[mm]	250								
Drilling method											
Hammer drilling with hard metal hammer drill											

Table C95.2: Group factors

Anchor rod			M8	M10	M10	M12	M12	M16	M16	M12	M16
Perforated sleeve FIS H K			16x130		18x130/200		20x130		22x130/200	20x200	
Group factors	$\alpha_{g,N}$ ∥	[-]	2								
	$\alpha_{g,V}$ ∥	[-]	2								
	$\alpha_{g,N}$ ⊥	[-]	2								
	$\alpha_{g,V}$ ⊥	[-]	2								

Light-weight concrete solid block Vbl, EN 771-3

Table C96.1: Characteristic resistance under tensile load

Anchor rod			**M8**	**M10**	**M10**	**M12**	**M12**	**M16**	**M16**	**M12**	**M16**
Perforated sleeve FIS H K			**16x130**		**18x130/200**		**20x130**		**22x130/200**	**20x200**	
Tensile load N_{Rk} [kN] depending on the compressive strength f_b (temperature range 50/80°C)											
compressive strength f_b	use category										
2 N/mm²	w/w	w/d	2,0				2,5			3,0	
	d/d		2,0				3,0			4,0	

Factor for temperature range 72/120°C: 0,83

Table C96.2: Characteristic resistance under shear load

Anchor rod			**M8**	**M10**	**M10**	**M12**	**M12**	**M16**	**M16**	**M12**	**M16**
Perforated sleeve FIS H K			**16x130**		**18x130/200**		**20x130**		**22x130/200**	**20x200**	
Shear load V_{Rk} [kN] depending on the compressive strength f_b (temperature range 50/80°C and 72/120°C)											
compressive strength f_b	use category										
2 N/mm²	w/w	w/d	4,5						6,5		
	d/d										

Factor for job site tests and displacements see annex C110

Light-weight concrete solid block Vbl, EN 771-3

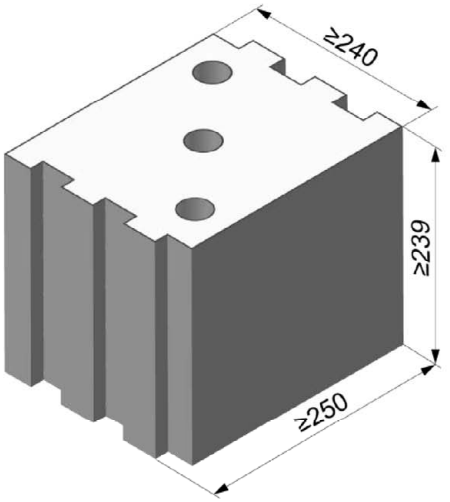

Light-weight concrete solid block Vbl, EN 771-3			
Producer	KLB		
Nominal dimensions [mm]	length L	width W	height H
	≥ 250	≥ 240	≥ 239
Density ρ [kg/dm³]	≥ 1,6		
Compressive strength f_b [N/mm²]	4 / 6 / 8		
Standard or annex	EN 771-3		

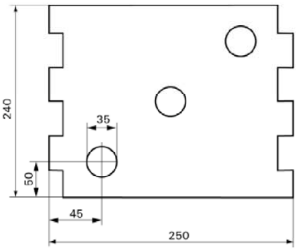

Table C97.1: Installation parameters
(Pre-positioned anchorage with perforated sleeve FIS H K)

Anchor rod	**M6**	**M8**	**M6**	**M8**	**-**	**M8**	**M10**	**M8**	**M10**	**-**	**M12**	**M16**	**M12**	**M16**	**M12**	**M16**
Internal threaded anchor FIS E	**-**		**-**		**M6** / **11x85**	**M8** / **11x85**	**-**	**-**		**M10** / **15x85**	**M12** / **15x85**	**-**	**-**		**-**	
Perforated sleeve FIS H K	**12x50**		**12x85**		**16x85**			**16x130**		**20x85**			**20x130**		**20x200**	
Anchor rod and internal threaded anchor FIS E with perforated sleeve FIS H K																
Max. installation torque T_{inst} [Nm]	4															
General installation parameters																
Edge distance c_{min} [mm]	130															
Spacing $s_{min} \parallel = s_{cr} \parallel$ [mm]	250															
Spacing $s_{min} \perp = s_{cr} \perp$ [mm]	250															
Drilling method																
Hammer drilling with hard metal hammer drill																

Table C97.2: Group factors

Anchor rod	**M6**	**M8**	**M6**	**M8**	**-**	**M8**	**M10**	**M8**	**M10**	**-**	**M12**	**M16**	**M12**	**M16**	**M12**	**M16**
Internal threaded anchor FIS E	**-**		**-**		**M6** / **11x85**	**M8** / **11x85**	**-**	**-**		**M10** / **15x85**	**M12** / **15x85**	**-**	**-**		**-**	
Perforated sleeve FIS H K	**12x50**		**12x85**		**16x85**			**16x130**		**20x85**			**20x130**		**20x200**	
Group factors $\alpha_{g,N} \parallel$, $\alpha_{g,V} \parallel$, $\alpha_{g,N} \perp$, $\alpha_{g,V} \perp$ [-]	2,0															

Light-weight concrete solid block Vbl, EN 771-3

Table C98.1: Installation parameters
(Push through anchorage with perforated sleeve FIS H K)

Anchor rod			**M10**	**M12**	**M16**
Perforated sleeve FIS H K			**18x130/200**		**22x130/200**
Anchor rod with perforated sleeve FIS H K					
Max. installation torque	T_{inst}	[Nm]	2		
General installation parameters					
Edge distance	c_{min}	[mm]	130		
Spacing	$s_{min} \parallel = s_{cr} \parallel$	[mm]	250		
	$s_{min} \perp = s_{cr} \perp$	[mm]	250		
Drilling method					
Hammer drilling with hard metal hammer drill					

Table C98.2: Group factors

Anchor rod			**M10**	**M12**	**M16**
Perforated sleeve FIS H K			**18x130/200**		**22x130/200**
Group factors	$\alpha_{g,N} \parallel$	[-]	2,0		
	$\alpha_{g,V} \parallel$	[-]	2,0		
	$\alpha_{g,N} \perp$	[-]	2,0		
	$\alpha_{g,V} \perp$	[-]	2,0		

Light-weight concrete solid block Vbl, EN 771-3

Table C99.1: Characteristic resistance under tensile load (Pre-positioned anchorage)

Anchor rod		**M6**	**M8**	**M6**	**M8**	**-**	**M8**	**M10**	**M8**	**M10**	**-**	**M12**	**M16**	**M12**	**M16**	**M12**	**M16**
Internal threaded anchor FIS E		**-**		**-**		**M6** / **11x85**	**M8**	**-**	**-**		**M10** / **15x85**	**M12**	**-**		**-**		**-**
Perforated sleeve FIS H K		**12x50**		**12x85**		**16x85**			**16x130**		**20x85**			**20x130**		**20x200**	
Tensile load N_{Rk} [kN] depending on the compressive strength f_b (temperature range 50/80°C)																	
compressive strength f_b	use category																
4 N/mm²	w/w w/d	1,2		2,0		2,5					3,0						
	d/d	2,0		3,5		4,0					5,0						
6 N/mm²	w/w w/d	1,5		3,0		4,0					5,0						
	d/d	3,0		5,0		6,5					7,5						
8 N/mm²	w/w w/d	2,0		4,0		5,0					6,5						
	d/d	4,0		7,0		8,5					9,0						

Table C99.2: Characteristic resistance under tensile load (Push through anchorage)

Anchor rod		**M10**	**M12**	**M16**
Perforated sleeve FIS H K		**18x130/200**		**22x130/200**
Tensile load N_{Rk} [kN] depending on the compressive strength f_b (temperature range 50/80°C)				
compressive strength f_b	use category			
4 N/mm²	w/w w/d	2,5		3,0
	d/d	4,0		5,0
6 N/mm²	w/w w/d	4,0		5,0
	d/d	6,5		7,5
8 N/mm²	w/w w/d	5,0		6,5
	d/d	8,5		9,0

Factor for job site tests and displacements see annex C110

Factor for temperature range 72/120°C: 0,83

Light-weight concrete solid block Vbl, EN 771-3

Table C100.1: Characteristic resistance under shear load (Pre-positioned anchorage)

Anchor rod	**M6**	**M8**	**M6**	**M8**	**-**		**M8**	**M10**	**M8**	**M10**	**-**		**M12**	**M16**	**M12**	**M16**	**M12**	**M16**
Internal threaded anchor FIS E	**-**		**-**		**M6**	**M8**	**-**		**-**		**M10**	**M12**	**-**		**-**		**-**	
					11x85						**15x85**							
Perforated sleeve FIS H K	**12x50**		**12x85**		**16x85**				**16x130**		**20x85**				**20x130**		**20x200**	
Shear load V_{Rk} [kN] depending on the compressive strength f_b (temperature range 50/80°C and 72/120°C)																		
compressive strength f_b	use category																	
4 N/mm²	w/w	w/d	2,0	3,0	2,0	3,0	2,0		3,5				4,5					
	d/d																	
6 N/mm²	w/w	w/d	3,0	4,5	3,0	4,5	3,0		5,5				6,5					
	d/d																	
8 N/mm²	w/w	w/d	4,0	6,0	4,0	6,0	4,0		7,0				8,5					
	d/d																	

Table C100.2: Characteristic resistance under shear load (Push through anchorage)

Anchor rod	**M10**	**M12**	**M16**
Perforated sleeve FIS H K	**18x130/200**		**22x130/200**
Shear load V_{Rk} [kN] depending on the compressive strength f_b (temperature range 50/80°C and 72/120°C)			
compressive strength f_b	use category		
4 N/mm²	w/w w/d d/d	3,5	4,5
6 N/mm²	w/w w/d d/d	5,5	6,5
8 N/mm²	w/w w/d d/d	7,0	8,5

Factor for job site tests and displacements see annex C110

Light-weight concrete solid block Vbl, EN 771-3

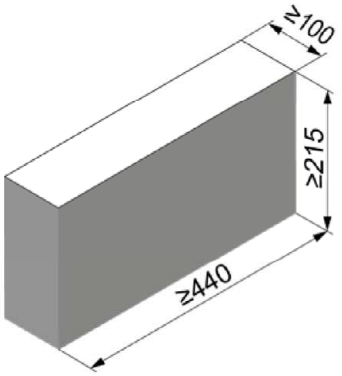

Light-weight concrete solid block Vbl, EN 771-3				
Producer		Roadstone wood		
Nominal dimensions	[mm]	length L	width W	height H
		≥ 440	≥ 100	≥ 215
Density ρ	[kg/dm³]	≥ 2,0		
Compressive strength f_b	[N/mm²]	4 / 6 / 8 / 10		
Standard or annex		EN 771-3		

Table C101.1: Installation parameters

Anchor rod			M6		M8		M10		M12		M16	
Anchor rod without perforated sleeve												
Effective anchorage depth	h_{ef}	[mm]	50	70	50	70	50	70	50	70	50	70
Max. installation torque	T_{inst}	[Nm]	4		10							
General installation parameters												
Edge distance	c_{min}	[mm]	100									
Spacing	s_{min} ∥		75									
	s_{cr} ∥		3x h_{ef}									
	s_{min} ⊥		75									
	s_{cr} ⊥		3x h_{ef}									
Drilling method												
Hammer drilling with hard metal hammer drill												

Table C101.2: Group factors

Anchor rod			M6	M8	M10	M12	M16
Group factors	$\alpha_{g,N}$ ∥	[-]	1,6				
	$\alpha_{g,V}$ ∥		1,3				
	$\alpha_{g,N}$ ⊥		1,4				
	$\alpha_{g,V}$ ⊥		1,3				

Light-weight concrete solid block Vbl, EN 771-3

Table C102.1: Characteristic resistance under tensile load

Anchor rod		M6	M8	M10	M12	M16
Tensile load N_{Rk} [kN] depending on the compressive strength f_b (temperature range 50/80°C)						
compressive strength f_b	use category	Effective anchorage depth h_{ef} [mm] ≥ 50				
4 N/mm²	w/w w/d	1,2	1,2			
	d/d	2,0	2,0			
6 N/mm²	w/w w/d	1,5	2,0			
	d/d	3,0	3,5			
8 N/mm²	w/w w/d	2,0	2,5			
	d/d	4,0	4,5			
10N/mm²	w/w w/d	3,0	3,5			
	d/d	5,0	5,5			

Factor for temperature range 72/120°C: 0,83

Table C102.2: Characteristic resistance under shear load

Anchor rod		M6	M8	M10	M12	M16
Shear load V_{Rk} [kN] depending on the compressive strength f_b (temperature range 50/80°C and 72/120°C)						
compressive strength f_b	use category	Effective anchorage depth h_{ef} [mm] ≥ 50				
4 N/mm²	w/w w/d d/d	1,2	1,5	1,5	1,5	1,5
6 N/mm²	w/w w/d d/d	2,0	2,0	2,5	2,5	2,5
8 N/mm²	w/w w/d d/d	2,5	2,5	3,0	3,0	3,5
10N/mm²	w/w w/d d/d	3,0	3,5	4,0	4,0	4,5

Factor for job site tests and displacements see annex C110

Light-weight concrete solid block Vbl, EN 771-3

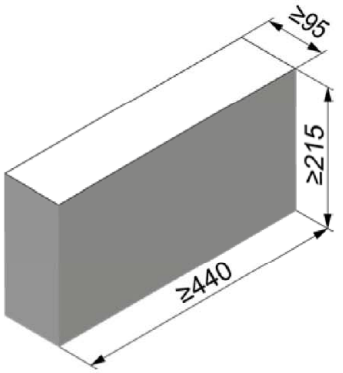

Light-weight concrete solid block Vbl, EN 771-3				
Producer		Tramac		
Nominal dimensions [mm]		length L	width W	height H
		≥ 440	≥ 95	≥ 215
Density ρ	[kg/dm³]	≥ 2,0		
Compressive strength f_b	[N/mm²]	6 / 8 / 10 / 12		
Standard or annex		EN 771-3		

Table C103.1: Installation parameters

Anchor rod			M6		M8		M10		M12		M16	
Anchor rod without perforated sleeve												
Effective anchorage depth	h_{ef}	[mm]	50	70	50	70	50	70	50	70	50	70
Max. installation torque	T_{inst}	[Nm]	4		10							
General installation parameters												
Edge distance	c_{min}	[mm]	60									
Spacing	s_{min} ∥	[mm]	75									
	s_{cr} ∥	[mm]	3x h_{ef}									
	s_{min} ⊥	[mm]	75									
	s_{cr} ⊥	[mm]	3x h_{ef}									
Drilling method												
Hammer drilling with hard metal hammer drill												

Table C103.2: Group factors

Anchor rod			M6	M8	M10	M12	M16
Group factors	$\alpha_{g,N}$ ∥	[-]	1,9				
	$\alpha_{g,V}$ ∥	[-]	1,4				
	$\alpha_{g,N}$ ⊥	[-]	1,9				
	$\alpha_{g,V}$ ⊥	[-]	1,4				

Light-weight concrete solid block Vbl, EN 771-3

Table C104.1: Characteristic resistance under tensile load

Anchor rod		M6		M8		M10		M12		M16	
Tensile load N_{Rk} [kN] depending on the compressive strength f_b (temperature range 50/80°C)											
compressive strength f_b	use category	Effective anchorage depth h_{ef} [mm]									
		50	70	50	70	50	70	50	70	50	70
6 N/mm²	w/w w/d	1,5	2,0	1,5	2,0	1,5	2,0	1,5	2,0	1,5	2,0
	d/d	2,5	3,5	2,5	3,5	2,5	3,5	2,5	3,5	2,5	3,5
8 N/mm²	w/w w/d	2,0	2,5	2,0	2,5	2,0	3,0	2,0	3,0	2,0	3,0
	d/d	3,5	4,5	3,5	4,5	3,5	5,0	3,5	5,0	3,5	5,0
10N/mm²	w/w w/d	2,5	3,5	2,5	3,5	2,5	3,5	2,5	3,5	2,5	3,5
	d/d	4,5	6,0	4,5	6,0	4,5	6,0	4,5	6,0	4,5	6,0
12N/mm²	w/w w/d	3,0	4,0	3,0	4,0	3,0	4,5	3,0	4,5	3,0	4,5
	d/d	5,0	7,0	5,0	7,0	5,0	7,5	5,0	7,5	5,0	7,5

Factor for temperature range 72/120°C: 0,83

Table C104.2: Characteristic resistance under shear load

Anchor rod		M6	M8	M10	M12	M16
Shear load V_{Rk} [kN] depending on the compressive strength f_b (temperature range 50/80°C and 72/120°C)						
compressive strength f_b	use category	Effective anchorage depth h_{ef} [mm] ≥ 50				
6 N/mm²	w/w w/d d/d	2,0	2,0	2,0	1,5	1,5
8 N/mm²	w/w w/d d/d	2,5	2,5	3,0	2,5	2,5
10N/mm²	w/w w/d d/d	3,5	3,5	4,0	3,0	3,0
12N/mm²	w/w w/d d/d	4,0	4,0	4,5	3,5	3,5

Factor for job site tests and displacements see annex C110

Autoclaved aerated concrete (cylindrical drill hole), EN 771-4

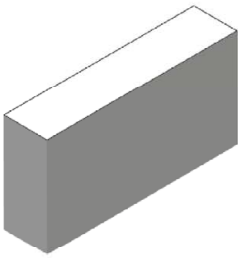

Autoclaved aerated concrete, EN 771-4				
Producer		e.g. Ytong		
Density ρ	[kg/dm³]	0,35	0,5	0,65
Compressive strength f_b	[N/mm²]	2	4	6
Standard or annex		EN 771-4		

Table C105.1: Installation parameters

Anchor rod			**M6**		**M8**		**M10**		**M12**		**M16**		**-**		**-**	
Internal threaded anchor FIS E			**-**		**-**		**-**		**-**		**-**		**M6**	**M8**	**M10**	**M12**
													11x85		**15x85**	
Anchor rod and internal threaded anchor FIS E without perforated sleeve																
Effective anchorage depth	h_{ef}	[mm]	100	200	100	200	100	200	100	200	100	200	85			
Max. installation torque	T_{inst}	[Nm]	1	4	1	8	2	12	2	16	2	20	1		2	
General installation parameters																
Edge distance	c_{min}	[mm]	100													
Spacing	s_{cr} II = s_{min} II	[mm]	250													
	h_{ef}=200mm s_{min} II	[mm]	80													
	h_{ef}=200mm s_{cr} II	[mm]	3x h_{ef}													
	s_{cr} ⊥ = s_{min} ⊥	[mm]	250													
	h_{ef}=200mm s_{min} ⊥		80													
	h_{ef}=200mm s_{cr} ⊥		3x h_{ef}													
Drilling method																
Hammer drilling with hard metal hammer drill																

Table C106.1: Group factors for autoclaved aerated concrete (Compressive strength f_b =2 N/mm²)

Anchor rod			M6	M8	M10	M12	M16	-	-
Internal threaded anchor FIS E			-	-	-	-	-	M6 M8	M10 M12
								11x85	15x85
Group factors	h_{ef}=200 $\alpha_{g,N}$ II	[-]	1,6					-[1]	-[1]
	h_{ef}=200 $\alpha_{g,V}$ II		1,1					-[1]	-[1]
	$\alpha_{g,N}$ II, $\alpha_{g,V}$ II		2						
	h_{ef}=200 $\alpha_{g,N}\perp$		1,6					-[1]	-[1]
	h_{ef}=200 $\alpha_{g,V}\perp$		0,8					-[1]	-[1]
	$\alpha_{g,N}\perp$, $\alpha_{g,V}\perp$		2						

[1] No performance assessed

Table C106.2: Group factors for autoclaved aerated concrete (Compressive strength f_b =4 N/mm²)

Anchor rod			M6	M8	M10	M12	M16	-	-
Internal threaded anchor FIS E			-	-	-	-	-	M6 M8	M10 M12
								11x85	15x85
Group factors	h_{ef}=200 $\alpha_{g,N}$ II	[-]	0,7					-[1]	-[1]
	h_{ef}=200 α_{gV} II		2,0					-[1]	-[1]
	$\alpha_{g,N}$ II, α_{gV} II		2						
	h_{ef}=200 $\alpha_{g,N}\perp$		0,7					-[1]	-[1]
	h_{ef}=200 $\alpha_{g,V}\perp$		1,2					-[1]	-[1]
	$\alpha_{g,N}\perp$, $\alpha_{gV}\perp$		2						

[1] No performance assessed

Table C106.3: Group factors for autoclaved aerated concrete (Compressive strength f_b =6 N/mm²)

Anchor rod			M6	M8	M10	M12	M16	-	-
Internal threaded anchor FIS E			-	-	-	-	-	M6 M8	M10 M12
								11x85	15x85
Group factors	h_{ef}=200 $\alpha_{g,N}$ II	[-]	0,7					-[1]	-[1]
	h_{ef}=200 $\alpha_{g,V}$ II		2,0					-[1]	-[1]
	$\alpha_{g,N}$ II, $\alpha_{g,V}$ II		2						
	h_{ef}=200 $\alpha_{g,N}\perp$		0,7					-[1]	-[1]
	h_{ef}=200 $\alpha_{g,V}\perp$		1,2					-[1]	-[1]
	$\alpha_{g,N}\perp$, $\alpha_{g,V}\perp$		2						

[1] No performance assessed

Autoclaved aerated concrete (cylindrical drill hole), EN 771-4

Table C107.1: Characteristic resistance under tensile load

Anchor rod		M6		M8		M10		M12		M16		-		-	
Internal threaded anchor FIS E		-		-		-		-		-		M6	M8	M10	M12
												11x85		15x85	
Tensile load N_{Rk} [kN] depending on the compressive strength f_b (temperature range 50/80°C)															
compressive strength f_b	use category	Effective anchorage depth h_{ef} [mm]													
		100	200	100	200	100	200	100	200	100	200	85			
2 N/mm²	w/w w/d	1,2	1,2	1,5	2,0	1,5	3,0	1,5	3,0	2,0	3,0	1,5		1,5	
	d/d	1,5	3,0	1,5	3,0	1,5	3,5	2,0	4,0	2,0	4,0	1,5		1,5	
4 N/mm²	w/w w/d	1,2	-[1]	2,0	1,5	2,5	3,5	2,5	3,5	2,0	3,5	2,0		1,5	
	d/d	1,5	-[1]	2,0	3,0	3,0	5,0	2,5	5,0	2,0	5,0	2,0		1,5	
6 N/mm²	w/w w/d	1,5	-[1]	3,0	2,5	4,5	5,0	4,5	7,0	3,0	8,5	3,5		2,5	
	d/d	1,5	-[1]	3,5	4,0	5,0	7,0	5,0	9,0	3,0	11,5	3,5		2,5	

[1] No performance assessed

Factor for temperature range 72/120°C: 0,83

Table C107.2: Characteristic resistance under shear load

Anchor rod		M6		M8		M10		M12		M16		-		-	
Internal threaded anchor FIS E		-		-		-		-		-		M6	M8	M10	M12
												11x85		15x85	
Shear load V_{Rk} [kN] depending on the compressive strength f_b (temperature range 50/80°C and 72/120°C)															
compressive strength f_b	use category	Effective anchorage depth h_{ef} [mm]													
		100	200	100	200	100	200	100	200	100	200	85			
2 N/mm²	w/w w/d d/d	1,2	1,2	1,2	1,2	1,2	1,2	1,5	1,2	1,2	1,2	1,2		1,5	
4 N/mm²	w/w w/d d/d	2,0	-[1]	2,5	2,0	2,0	2,0	2,5	2,0	2,0	2,0	2,0		2,5	
6 N/mm²	w/w w/d d/d	2,5	-[1]	3,0	2,5	3,0	3,0	3,5	4,0	4,5	4,5	2,5		3,5	

[1] No performance assessed

Factor for job site tests and displacements see annex C110

Autoclaved aerated concrete (conical drill hole with special drill bit PBB), EN 771-4

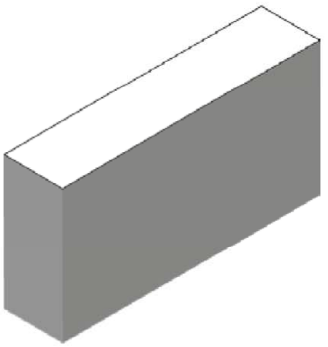

Autoclaved aerated concrete, EN 771-4				
Producer		e.g. Ytong		
Density ρ	[kg/dm³]	0,35	0,5	0,65
Compressive strength f_b	[N/mm²]	2	4	6
Standard or annex		EN 771-4		

Table C108.1: Installation parameters

Anchor rod			**M8**		**M10**		**M12**		**-**	
Internal threaded anchor FIS E			-	-	-	-	-	-	**M6**	**M8**
									11x85	
Anchor rod and internal threaded anchor FIS E without perforated sleeve										
Effective anchorage depth	h_{ef}	[mm]	75	95	75	95	75	95	85	
Max. installation torque	T_{inst}	[Nm]	2							
General installation parameters										
Edge distance	c_{min}	[mm]	120	150	120	150	120	150	150	
Spacing	s_{cr} II = s_{min} II	[mm]	240	300	240	300	240	300	300	
	s_{cr} ⊥ = s_{min} ⊥	[mm]	240	250	240	250	240	250	250	
Drilling method										
Hammer drilling with hard metal hammer drill										

Table C108.2: Group factors

Anchor rod			**M8**		**M10**		**M12**		**-**	
Internal threaded anchor FIS E			-	-	-	-	-	-	**M6**	**M8**
									11x85	
Group factors	$\alpha_{g,N}$ II	[-]	2							
	$\alpha_{g,V}$ II									
	$\alpha_{g,N}$ ⊥									
	$\alpha_{g,V}$ ⊥									

Autoclaved aerated concrete (conical drill hole with special drill bit PBB), EN 771-4

Table C109.1: Characteristic resistance under tensile load

Anchor rod		**M8**		**M10**		**M12**		**-**	
Internal threaded anchor FIS E		-	-	-	-	-	-	**M6**	**M8**
								11x85	
Tensile load N_{Rk} [kN] depending on the compressive strength f_b (temperature range 50/80°C)									
compressive strength f_b	use category	Effective anchorage depth h_{ef} [mm]							
		75	95	75	95	75	95	85	
2 N/mm²	w/w w/d	2,0	2,5	2,0	2,5	2,0	2,5	2,0	
	d/d	2,0	2,5	2,0	2,5	2,0	2,5	2,0	
4 N/mm²	w/w w/d	3,0	3,5	3,0	3,5	3,0	3,5	3,0	
	d/d	3,0	3,5	3,0	3,5	3,0	3,5	3,0	
6 N/mm²	w/w w/d	3,5	4,0	3,5	4,0	3,5	4,0	3,5	
	d/d	4,0	4,5	4,0	4,5	4,0	4,5	4,0	

Factor for temperature range 72/120°C: 0,83

Table C109.2: Characteristic resistance under shear load

Anchor rod		**M8**		**M10**		**M12**		**-**	
Internal threaded anchor FIS E		-	-	-	-	-	-	**M6**	**M8**
								11x85	
Shear load V_{Rk} [kN] depending on the compressive strength f_b (temperature range 50/80°C and 72/120°C)									
compressive strength f_b	use category	Effective anchorage depth h_{ef} [mm]							
		75	95	75	95	75	95	85	
2 N/mm²	w/w w/d d/d	2,5							
4 N/mm²	w/w w/d d/d	4,5							
6 N/mm²	w/w w/d d/d	6,0							

Factor for job site tests and displacements see annex C110

β-factors for job site tests; displacements

Table C110.1: β-factors for job site tests

use category		w/w and w/d		d/d	
temperature range		50/80	72/120	50/80	72/120
Material	Size				
solid units	M6	0,55	0,46	0,96	0,80
	M8	0,57	0,51		
	M10	0,59	0,52		
	M12 FIS E 11x85	0,6	0,54		
	M16 FIS E 15x85	0,62	0,52		
	FIS H 16x85 K	0,55	0,46		
hollow units	all sizes	0,86	0,72	0,96	0,8
Autoclaved aerated concrete cylindrical drill hole	all sizes	0,73	0,73	0,81	0,81
Autoclaved aerated concrete conical drill hole	all sizes	0,66	0,59	0,73	0,66

Table C110.2: Displacements

Material	N [kN]	δN_0 [mm]	δN_∞ [mm]	V [kN]	δV_0 [mm]	δV_∞ [mm]
solid units and autoclaved aerated concrete h_{ef}=100mm	$\frac{N_{Rk}}{1,4 * \gamma_{Mm}}$	0,03	0,06	$\frac{V_{Rk}}{1,4 * \gamma_{Mm}}$	0,82	0,88
hollow units	$\frac{N_{Rk}}{1,4 * \gamma_{Mm}}$	0,48	0,06	$\frac{V_{Rk}}{1,4 * \gamma_{Mm}}$	1,71	2,56
solid brick Mz NF annex C 4 - C 7	$\frac{N_{Rk}}{1,4 * \gamma_{Mm}}$	0,74	1,48	$\frac{V_{Rk}}{1,4 * \gamma_{Mm}}$	1,23	1,85
solid brick KS NF annex C 14 / C 15	$\frac{N_{Rk}}{1,4 * \gamma_{Mm}}$	0,2	0,4	$\frac{V_{Rk}}{1,4 * \gamma_{Mm}}$	0,91	1,37
AAC h_{ef}=200 mm annex C 105 - C 107	$\frac{N_{Rk}}{1,4 * \gamma_{Mm}}$	1,03	2,06	$\frac{V_{Rk}}{1,4 * \gamma_{Mm}}$	1,25	1,88
brick Annex C 89 / C 90	$\frac{N_{Rk}}{1,4 * \gamma_{Mm}}$	0,03	0,06	$\frac{V_{Rk}}{1,4 * \gamma_{Mm}}$	6,44	9,66

For anchorage in autoclaved aerated concrete, the partial factor γ_{MAAC} shall be used instead of γ_{Mm}.