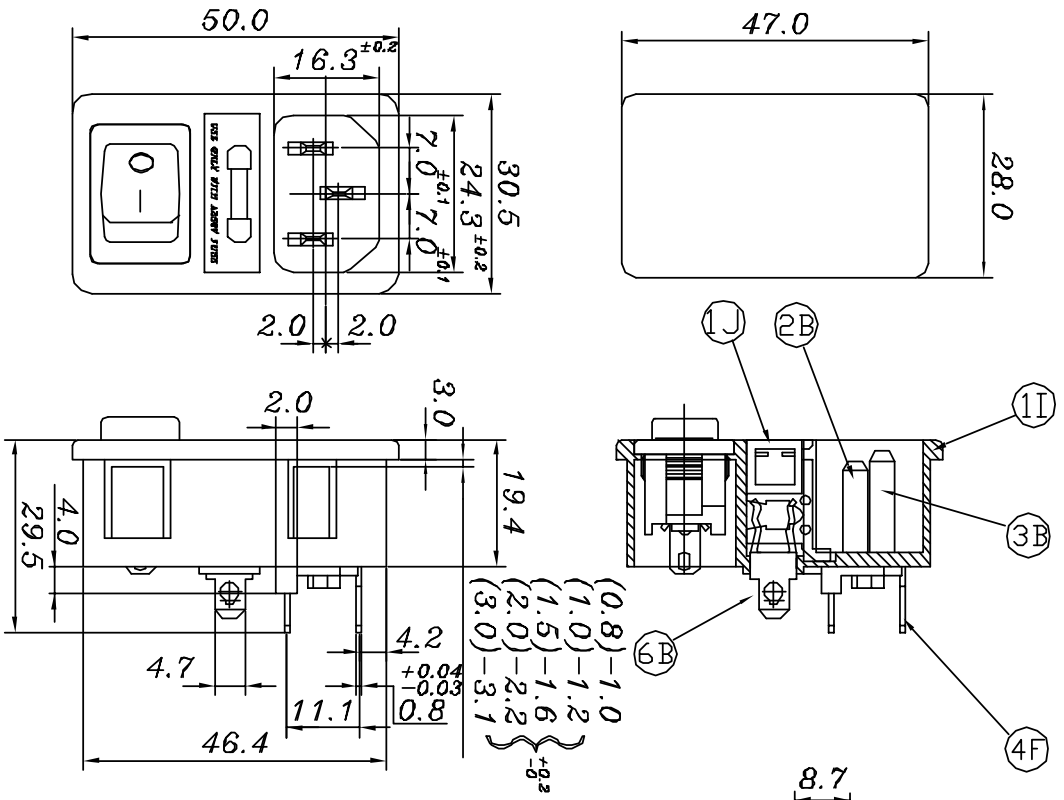

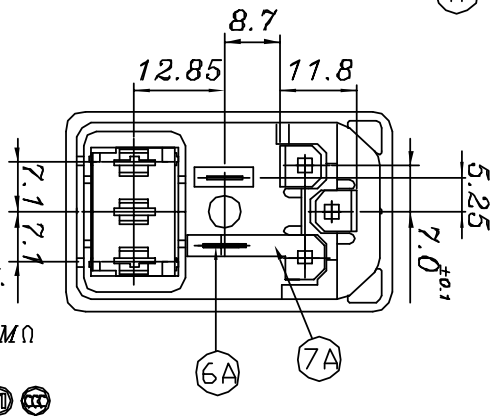

SPECIFICATIONS

1. RATING : 10A 250VAC
2. WITHSTAND VOLTAGE : AC 2000V/1 MIN.
3. INSULATION RESISTANCE : MORE THAN 100MΩ (at DC 500V)
4. SAFETY :

7A	CONNECTOR	1	Bsp1-1/2H	t=0.6	Sn-plated	Q101-07A
6B	FUSE HOLDER	1	Bsp1-1/2H	t=0.8	Sn-plated	Q101-06B
6A	FUSE HOLDER(SHORT)	1	Bsp1-1/2H	t=0.5	Sn-plated	Q101-06A
4F	CONNECTION TERMINAL	2	Bsp1-1/2H	t=0.8	Sn-plated	Q101-04F
3B	CENTER TERMINAL	1	Bsp1-1/2H	t=2.0	Sn-plated	Q101-03B
2B	EDGE TERMINAL	2	Bsp1-1/2H	t=2.0	Sn-plated	Q101-02B
1J	FUSE COVER	1	Nylon#66	94v-2		Q101-01J
1I	BODY	1	Nylon#66	94v-2		Q101-01I

L,chun-ting 930108			
L,chun-ting 930108			
L,chun-ting 930108	(0.8,1.0,1.5,2.0,3.0)		
	A101-0A0	1:1	MM
			A101-0A0

ELCART DISTRIBUTION SPA via Michelangelo Buonarroti, 46 - 20093 Cologno Monzese (Milano) ITALY
Tel. +39 02.25117310 Fax +39 02.25117610 sito internet: www.elcart.com e-mail: info@elcart.it

La divulgazione dei dati contenuti in questa scheda è da ritenersi un servizio puramente informativo e non costituisce alcun vincolo da parte della Elcart in merito a prestazioni ed utilizzo del prodotto.
The divulgation of data contained on this technical sheet are exclusively for informational reasons and establish no link on behalf of Elcart regard to thr performances and the usa of the product.
La divulgacion de los datos contenidos en esta ficha son un servicio unicamente informativo y no constituyen ningun vinculo de parte de Elcart respecto a las prestaciones y uso del producto.