1、Contact rating: AC 125V 6A; AC 250V 3A
2、Contact R: 20mΩ Max
3、Insulation R: 1000 MΩ Min
4、Dielectric strength: AC1500V, 1 minute
5、Operating temperature: −55 °C~85 °C
6、Electrical life: 20,000 Cycles
7. Soldering: 30W-3 sec.

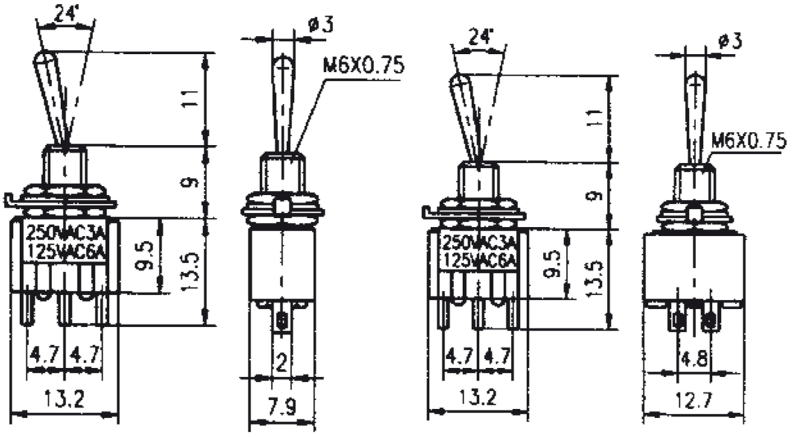

ART.	Circuitry trait			Type	Terminals
04/06594-00	ON	-	ON	SPDT	3P
04/06567-00	ON	-	ON	SPDT	3P
04/06585-00	ON	-	(ON)	SPDT	3P
04/06593-00	ON	OFF	ON	SPDT	3P
04/06587-00	ON	OFF	(ON)	SPDT	3P
	ON	OFF	(ON)	SPDT	3P

Handle options

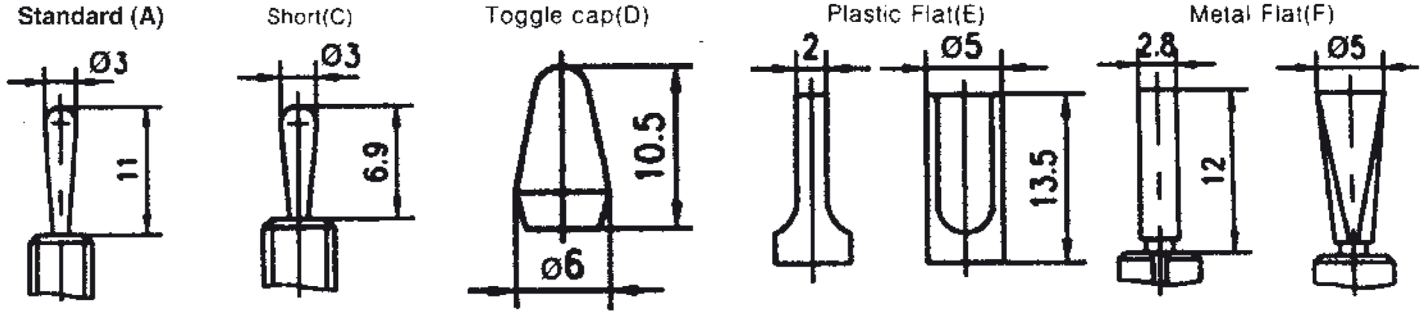

Terminal options

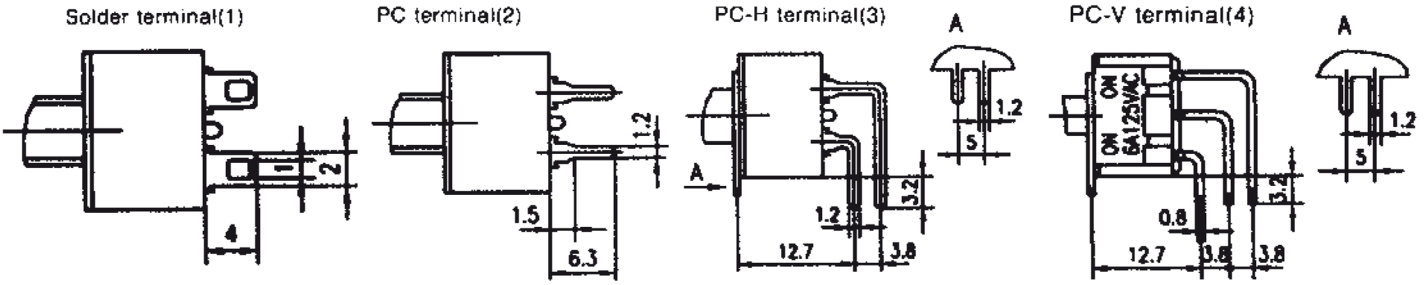

04/06567-00 ON - ON
04/06585-00 ON - (ON)
04/06587-00 ON - OFF - (ON)
04/06593-00 ON - OFF - ON
04/06594-00 ON - ON

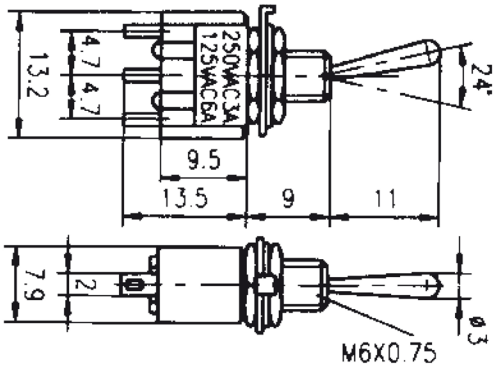

Affix Annex

Nameplate

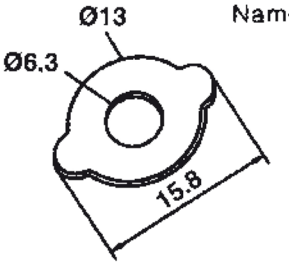

ON	—	OFF
ON	—	ON
ON	OFF	ON

ELCART DISTRIBUTION SPA via Michelangelo Buonarroti, 46 - 20093 Cologno Monzese (Milano) ITALY
Tel. +39 02.25117310 Fax +39 02.25117610 sito internet: www.elcart.com e-mail: tecnico@elcart.it

La divulgazione dei dati contenuti in questa scheda è da ritenersi un servizio puramente informativo e non costituisce alcun vincolo da parte della Elcart in merito a prestazioni ed utilizzo del prodotto.
The divulgation of data contained on this technical sheet are exclusively for informational reasons and establish no link on behalf of Elcart regard to the performances and the use of the product.
La divulgacion de los datos contenidos en esta ficha son un servicio unicamente informativo y no constituyen ningun vinculo de parte de Elcart respecto a las prestaciones y uso del producto.