ELCART

Manuale di istruzioni/Scheda tecnica

FOR	APPROVED	ATTN

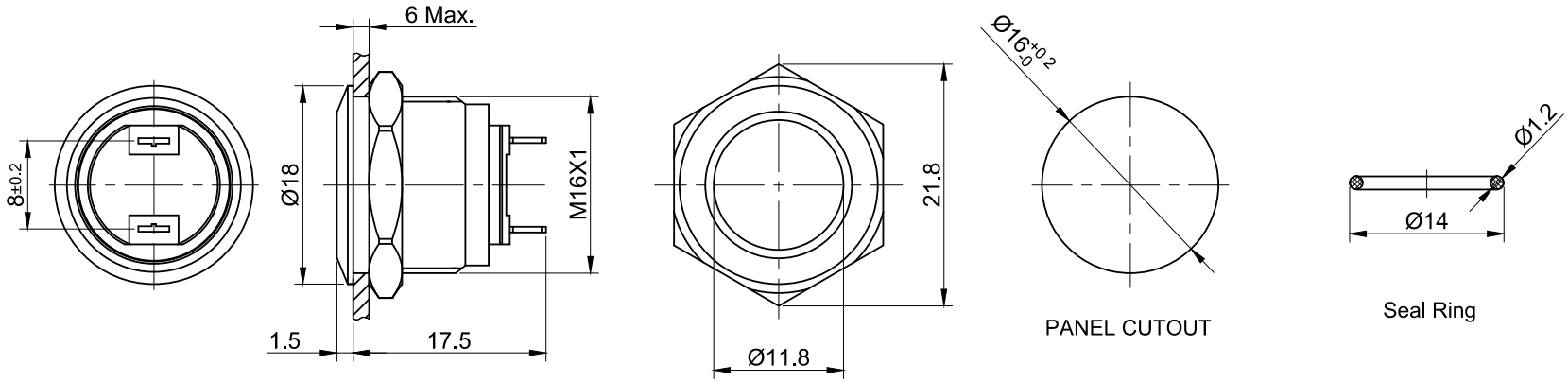

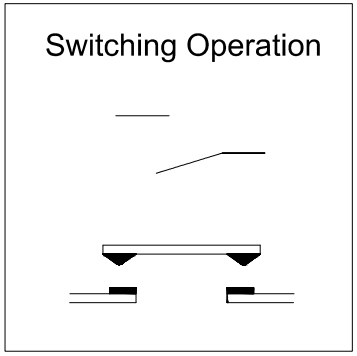

Part Number: ◎

"◎"	Crust material
S	Stainless steel

SPECIFICATIONS:

1. Switch Rating: AC220V/0.5A.
2. Mechanical Life: ≥1,000,000cycles.
3. Electrical Life: ≥50,000cycles.
4. Contact Resistance: ≤50mΩ.
5. Insulation Resistance: ≥1,000MΩ.
6. Dielectric Strength: 1,500V, RMS 50Hz, 1min.
7. Operating Temperature: -25˚C～+55˚C (No Freezing).
8. Operating Force: About 4N.
9. Operating Travel: About 2mm.
10. Torque: About 0.6Nm max.applied to nut.
11. Protection degree: IP65.
12. Terminal Type: Pin Terminal (2x0.5mm).

MATERIALS:

1.Contact: Silver alloy.
2.Button: ◎.
3.Body: ◎.
4.Base: PA.

DIMENSIONS	TOLERANCE
0.00 TO 18.00mm	±0.43mm
18.01 TO 30.00mm	±0.52mm
30.01 TO 50.00mm	±0.62mm
50.01 TO 80.00mm	±0.74mm

ELCART DISTRIBUTION SPA via Michelangelo Buonarroti, 46 - 20093 Cologno Monzese (Milano) ITALY Tel. +39 02.25117310 - Fax +39 02.25117610
sito internet: www.elcart.com e-mail: tecnico@elcart.it

La divulgazione dei dati contenuti in questa scheda è da ritenersi un servizio puramente informativo e non costituisce alcun vincolo da parte della Elcart in merito a prestazioni ed utilizzo del prodotto.
The divulgation of data contained on this technical sheet are exclusively for informational reasons and establish no link on behalf of Elcart regard to the performances and the use of the product.
La divulgacion de los datos contenidos en esta ficha son un servicio unicamente informativo y no constituyen ningun vinculo de parte de Elcart respecto a las prestaciones y uso del producto.