Green Motion Building Installation manual



Powering Business Worldwide

DISCLAIMER OF WARRANTIES AND LIMITATION OF LIABILITY

The information, recommendations, descriptions and safety notations in this document are based on Eaton Corporation's ("Eaton") experience and judgment and may not cover all contingencies. If further information is required, an Eaton sales office should be consulted. Sale of the product shown in this literature is subject to the terms and conditions outlined in appropriate Eaton selling policies or other contractual agreement between Eaton and the purchaser.

THERE ARE NO UNDERSTANDINGS, AGREEMENTS, WARRANTIES, EXPRESSED OR IMPLIED, INCLUDING WARRANTIES OF FITNESS FOR A PARTICULAR PURPOSE OR MERCHANTABILITY, OTHER THAN THOSE SPECIFICALLY SET OUT IN ANY EXISTING CONTRACT BETWEEN THE PARTIES. ANY SUCH CONTRACT STATES THE ENTIRE OBLIGATION OF EATON. THE CONTENTS OF THIS DOCUMENT SHALL NOT BECOME PART OF OR MODIFY ANY CONTRACT BETWEEN THE PARTIES.

In no event will Eaton be responsible to the purchaser or user in contract, in tort (including negligence), strict liability or other-wise for any special, indirect, incidental or consequential damage or loss whatsoever, including but not limited to damage or loss of use of equipment, plant or power system, cost of capital, loss of power, additional expenses in the use of existing power facilities, or claims against the purchaser or user by its customers resulting from the use of the information, recommendations and descriptions contained herein. The information contained in this manual is subject to change without notice.

Content overview

1. INTRODUCTION. 6

1.1 Field of applications 7

1.2 Symbols used in this manual 7

1.2.1 Related icons 7

1.3 Conventions used in this document 8

2. CAUTIONS 9

2.1 Operating environment and restrictions 9

2.2 Suggested protections during the installation 10

2.3 Protection from electric shock 10

2.4 Electromagnetic fields and interferences 11

2.5 Warning decals and rating plate 11

2.6 Residual risks 11

3. GENERAL DESCRIPTION 12

3.1 Front and back views 12

3.2 Right and left views 14

3.3 Bottom view 15

3.4 Types of connectors 15

3.5 Energy meter 16

3.6 Product and accessory references 17

4. RELEVANT INFORMATION PRIOR TO THE INSTALLATION 18

4.1 Tools required for the installation 18

4.2 Checking the box contents 18

4.3 Dimensions and weight 18

4.4 Lifting, transportation and unloading instructions 19

4.5 Unpacking 19

5 MOUNTING AND INSTALLATION 20

5.1 Positioning the Green Motion Building EV charger 20

5.2 How to open/close the housing of the Green Motion Building EV charger 21

5.3 Mounting 23

6. ELECTRICAL AND NETWORK CONNECTIONS 28

6.1 Caution 28

6.2 Standard wiring 28

6.3 Electrical connection and terminals 30

6.4 Charging current limitation 32

6.5 Installation of an external switching device 34

6.5.1 Grid connection 34

6.5.2 Installation of an external switching device 35

6.6 Remote shut-off 41

6.7 Ethernet connection 42

6.7.1 Specifications 42

6.7.2 Wiring 42

6.8 4G LTE Connection. 43
6.8.1 Technical Specifications. 43
6.8.2 Data consumption 43
6.8.3 Installation instructions 43
6.9 Connection to an external energy meter 45

7. LOAD AND PHASE BALANCING 46
7.1 Definitions 46
7.2 Load balancing 48
7.2.1 Load balancing parameters 48
7.2.2 Static load balancing 48
7.2.3 Dynamic load balancing 49
7.2.4 Networking EV chargers 51
7.3 Phase balancing 51

8 DEVICE SETUP AND NETWORK CONFIGURATION 53
8.1 Configuration page access 53
8.1.1 Connection via Ethernet 53
8.1.2 Connection via Wi-Fi hotspot 54
8.2 Configuration page 55
8.2.1 User settings 57
8.2.2 Reboot and Apply Settings 57
8.3 Device settings 58
8.3.1 General 58
8.3.2 Grid settings 59
8.3.3 Network. 62
8.3.4 OCPP Server 65
8.3.5 Load Balancing 66
8.3.6 Smart Charging 70
8.3.7 User authorization 73
8.3.8 EMS Modbus TCP Service 76
8.3.9 Maintenance (Advanced Mode) 77
8.3.10 EMS Reporting (Advanced Mode) 78
8.4 Charger network configuration. 79
8.4.1 Configuration 1: All EV chargers in the network connected to the internet via an Ethernet switch - RECOMMENDED 79
8.4.2 Configuration 2: All EV chargers in the network connected to the internet via Wi-Fi router 81
8.4.3 Configuration 3: Master connected to the internet via Wi-Fi, Nodes connected to Master and each other in daisy-chain topology using RJ45 cable. 82
8.4.4 Configuration 4: Master connected to the internet via Ethernet switch, Nodes connected to Master and each other in daisy-chain topology using RJ45 cable. 86
8.4.5 Configuration 5: Master connected to the internet via 4G LTE, Nodes connected to Master and each other in daisy-chain topology using RJ45 cable. 89
8.4.6 Configuration 6: Master connected to the internet via 4G LTE, Nodes connected to the Master and each other via Wi-Fi, with Master acting as Wi-Fi hotspot 93
8.4.7 Configuration 7: All EV chargers in daisy-chain to router 95
8.5 Port usage 96

9 OPERATION 97
9.1 Switching on the Green Motion Building EV charger 97
9.2 LED indicator 98
9.3 Removing the plug 100

10. MAINTENANCE 101
10.1 Uninstall 101
10.2 Firmware updates 101
10.3 Factory reset 102
10.3.1 Through the commissioning page 102
10.3.2 Through Factory Reset button 103
10.4 Disposal 103

11. TROUBLESHOOTING 104

12. TECHNICAL DATA 105
12.1 Rating plate 105
12.2 Technical datasheet 106

13. PRODUCT GUARANTEE AND TECHNICAL SUPPORT 106

1. Introduction

Thank you for installing the Green Motion Building AC EV charger.

Before you start

This manual contains important instructions that must be followed during the installation, operation and maintenance of the Eaton Green Motion Building electric vehicle charger. All instructions must be read before installing and operating the equipment. This manual should be retained for future reference.
Please note that the Green Motion Building EV charger must only be installed and maintained by professional and qualified personnel, i.e. an Eaton technical support representative or professional installer. Professional and qualified personnel must be expert in the field and must therefore be responsible for commissioning the system in accordance with the manufacturer's instructions and ensure that all steps of the installation, operation and maintenance comply with local legislation.

There are no user-serviceable parts inside the equipment. Failure to observe the above will void the provided product guarantee and Eaton cannot be held legally accountable.

The contents of this manual are the copyright of Eaton and may not be copied, reproduced or redistributed in whole or in part without Eaton's prior written permission. While every care has been taken to ensure the accuracy of the information contained in this manual, Eaton assumes no liability for any error or omission. Eaton reserves the right to modify the designs of its products. The unauthorized copying and lending of this manual is prohibited.

Technical disclaimer

All drawings, descriptions and illustrations contained in this document serve to provide a clear overview and/or technical explanation of the present product and its various components and accessories. In line with our goal to continuously improve the products and the customer service we provide, all specifications contained in this document are subject to change without notice.

Legal entity

Eaton Manufacturing LP

Address: Glasgow, Morges branch
Route de la Longeraie 7
1110 Morges
Switzerland

Web: www.eaton.com

1.1 Field of applications

This installation manual is intended for professional and qualified personnel. It describes how to securely install the Green Motion Building AC EV charger.

Table 1. Overview of the Green Motion Building EV charger

Power input	**AC EV charger**
Input voltage	1 x 230 V (50 Hz) – 1 phase 3 x 400 V (50 Hz) – 3 phase
Input current	1 x 16 A (3.7 kW) – 1 phase 1 x 32 A (7.4 kW) – 1 phase 3 x 16 A (11 kW) – 3 phase 3 x 32 A (22 kW) – 3 phase
Earthing system compatibility	TN, TT, IT (1-phase)[1]
Power output	
Output power	3.7 kW to 22 kW
Output type	Type 2 cable (Mode 3) or socket (T2 or T2S)
Type of cables	Straight
Simultaneous charging	1
Environmental	
Operating temperature	-25 °C to +45 °C
Altitude	Up to 2000 m
Installation	Wall-mounted; indoor or outdoor
Humidity	< 95 % relative humidity
Mechanical	
Mounting method	Wall-mounted Floor-mounted column (optional)
Dimensions (W x H x D) in mm	285.5 x 264 x 116
Weight (without cables)	3 kg
Cable length	5 meters
Standards	
Conformity	IEC 61851-1
Degree of protection	IP54
Earth leakage detection	Built-in 6 mA DC RDC-DD protection according to IEC 62955
Impact strength	IK08

[1] It is not possible to install the unit in a 3-phase IT earthing system.

1.2 Symbols used in this manual

1.2.1 Related icons



Imminent danger of causing serious injuries or death.



Hazardous behaviors that could cause serious injuries. Hazardous behaviors that could cause death.



Behaviors that could cause minor injuries to people or minor damages to property.



Risk of electric shock that can be fatal. Avoid touching internal or external parts normally live while the system is powered on.



Read the instructions.
These instructions are intended for professional and qualified personnel. Professional and qualified personnel must be expert in the field and must therefore be responsible for commissioning the system in accordance with the manufacturer's instructions and local legislation.



Notes preceded by this symbol relate to technical issues and ease of operation.



The EU Directive on Waste Electrical and Electronic Equipment (WEEE).

1.3 Conventions used in this document

This manual adopts the following type conventions and acronyms to refer to the Eaton Green Motion Building EV charger or its parts:

ALL CAPITALS highlight critical points that require careful attention. All abbreviations used in this document are listed in Table 2.

Table 2. Glossary

Abbreviation	Description
AC	Alternating current
APN	Access point name
CNM	Charging network manager
CPO	Charge point operator
CU	Control unit
DC	Direct current
DHCP	Dynamic Host Configuration Protocol
DLB	Dynamic load balancing
EMC	Electromagnetic compatibility
EMI	Electromagnetic interference
EV	Electric vehicle
EVCI	Electric Vehicle Charging Infrastructure
FW	Firmware
GND	Ground
HW	Hardware
IEC	International Electrotechnical Commission
IP	Internet Protocol
LAN	Local area network
LCD	Liquid crystal display
LED	Light-emitting diode
N	Neutral
NAT	Network address translation
OCPP	Open Charge Point Protocol
OV	Over-voltage
PAT	Port Address Translation
PCB	Printed Circuit Board
PE	Protective earth
PPE	Personal protective equipment
RCBO	Residual Current Operated Circuit Breaker
RCD	Residual current device
RDC-DD	Residual Direct Current Detecting Device
SIM card	Subscriber identity module card
SSID	Service set identifier
SW	Software
TCP	Transmission Control Protocol
UI	User interface
UICC	Universal integrated circuit card
VPN	Virtual private network
WAN	Wide area network
WEEE	Waste of Electrical and Electronic Equipment

2. Cautions

These instructions are intended for professional and qualified personnel.
Before carrying out any operations, ensure you have read and understood this manual. Do not make changes and do not carry out maintenance operations not described in this manual. The manufacturer does not accept responsibility for injuries to people and property damages that occur because the information within this manual has not been read and followed.

The customer is civilly liable for the qualification and mental or physical state of the professional and qualified personnel who operate this equipment. They must always use the personal protective equipment required by the laws of the country of destination and anything else provided by their employer.



It is strictly prohibited to open the unit except as described in this manual. The installation of the equipment must be carried out by professional and qualified personnel. They must not be under the influence of alcohol or drugs or have prosthetic heart valves or pacemakers.



For any doubts or problems regarding the use of the system, even if not described here, please contact your Eaton sales representative.

The unit must not be subjected to any type of modification. Eaton declines any responsibility if the rules for correct installation are not respected and is not responsible for the system upstream or downstream of the equipment it supplies.

The exclusion of protective devices is extremely dangerous and relieves the manufacturer of any responsibility for damage to people and property.

A first aid kit must be provided.

2.1 Operating environment and restrictions

Each system must be used exclusively for the operations it was designed for and within the operative ranges specified in the rating plate and/or in the relative technical datasheet, in accordance with the national and international safety standards.

Any use different from the intended use specified by the manufacturer is to be considered totally inappropriate and dangerous, and in this case the manufacturer declines all responsibility.

Please check the regulations applied by the electricity provider.

The unit can be connected to the distribution network in accordance with local rules. The unit should comply with all the technical specifications.



Improper or unauthorised use:

Although carefully constructed, all electrical appliances can catch fire. The unit is intended for indoor or outdoor installation.

Optimal operation of the unit is in the temperature range -25 °C to +45 °C.

The unit must be transported and stored in indoor locations in the temperature range -25 °C to +45 °C.

The unit must be used in locations free from acids, gases or other corrosive substances.

The unit must be used and stored in locations with relative humidity below 95 %.

The unit must be transported in locations with relative humidity below 95 %.

The unit must be used below a maximum altitude of 2000 m above sea level.

2.2 Suggested protections during the installation

For obvious reasons, the manufacturer cannot envisage all potential types of installations and locations where the equipment might be installed; the customer must therefore clearly inform the manufacturer of specific conditions of installation. Eaton declines any responsibility if the unit is incorrectly installed.

The professional and qualified personnel must be correctly informed. The professional and qualified personnel must therefore read and follow the technical instructions contained in the manual and in the enclosed documentation.

The instructions provided in this manual do not replace the safety regulations of the installation and operational technical data printed on the products, nor do they replace the current safety standards enforced in the country where the equipment is installed, and the rules dictated by common sense.

The manufacturer can provide theoretical or practical training to professional and qualified personnel, either on its site or on the customer's premises, as specified at the time of drawing up the contract.

The equipment must not be used if any operational fault is identified.

Temporary repairs should be avoided; repair work must be carried out only with genuine spare parts, which must be installed in accordance with the intended use.

The responsibilities deriving from the commercial components are delegated to the respective manufacturers. Avoid touching the equipment enclosure during the equipment operation.

The equipment enclosure could overheat during its operation.

After switching off the equipment, the surface of the equipment could still be hot. In the event of fire, CO_2 foam extinguishers must be used, and self-vacuum systems must be used to put out fires in enclosed spaces.

If the noise level exceeds legal limits, the working area must be restricted, and anyone who has access to the area must wear ear defenders or ear plugs.

The noise level produced by the equipment in normal working conditions is lower than 50 dB.

During the installation process, special attention must be paid to fixing the equipment and its components. At this stage, restricting or preventing access to the installation area is recommended.

Professional and qualified personnel are recommended to wear clothing and personal protective equipment (PPE) provided by their employer. Professional and qualified personnel must not wear clothes or accessories that could start fires or produce static electricity, or any item of clothing that could affect personal safety. When carrying out any operation on the equipment, clothes and instruments must be suitably insulated.

Professional and qualified personnel must NOT access the equipment with bare feet or wet hands.

Professional and qualified personnel must always ensure that nobody else is able to reset or operate the equipment during maintenance and must report any fault or deterioration caused by wear or by aging, in order to restore the correct safety conditions.

Professional and qualified personnel must always pay attention to the working environment to ensure it is well lit and has a suitable escape route.

A first aid kit must be provided.

2.3 Protection from electric shock



An electric shock can be fatal.
Avoid touching internal or external parts normally live while the system is powered on.



Cables and connections must always be secured, in good condition, insulated and suitably sized.

2.4 Electromagnetic fields and interferences

Electromagnetic fields may have harmful effects (unknown to date) on the health of people who are subjected to long exposure. Avoid standing less than 20 cm from the equipment for long periods of time.



Professional and qualified personnel must be expert in the field and are therefore responsible for installing the system in accordance with the manufacturer's instructions and local legislation. If electromagnetic interferences are detected, professional and qualified personnel should contact an Eaton technical support representative.



Connect the unit's external frame or other conductive parts to ground to ensure system protection and the highest level of safety for the operators.



National standards related to grounding must be complied with.

2.5 Warning decals and rating plate



The labels on the equipment must NOT be removed, damaged, soiled or hidden. The labels must always be visible and in good condition.

The technical data shown in this manual does not replace those shown on the data plates on the equipment.

2.6 Residual risks



Despite the cautions and safety systems in place, some residual risks will still be present, which cannot be removed. These risks are listed in the following table, along with recommendations to prevent or mitigate them.

Table 3. Residual risks

Risk assessment	Recommended solution
Noise pollution caused by installations in unsuitable environments or where professionals work on a regular basis.	Reassess the installation environment or site.
Unsuitable ventilation in the location, causing equipment to overheat and the discomfort of people who are on the site.	Restore adequate ambient conditions and ventilate the site.
Protection from the elements such as water ingress, low temperatures, high humidity, etc.	Maintain adequate ambient conditions for the equipment.
Do not obstruct openings on the equipment.	Use suitable PPE or wait for the equipment to cool down before accessing it.
Dirt affects the system and prevents the safety labels from being read.	Adequately clean the equipment, the labels and the workplace.
Installation done poorly.	Request a training course.
During the installation stage, provisionally fixing the equipment or its components can be hazardous.	Take care and restrict access to the installation area.
Accidentally disconnecting the quick connectors while the equipment is operational or making incorrect connections can produce electric arcs.	Take care and restrict access to the installation area.

3. General description

The following figures show different views of the Green Motion Building AC EV charger.

3.1 Front and back views

Figure 1. Front and back views of the Green Motion Building EV charger

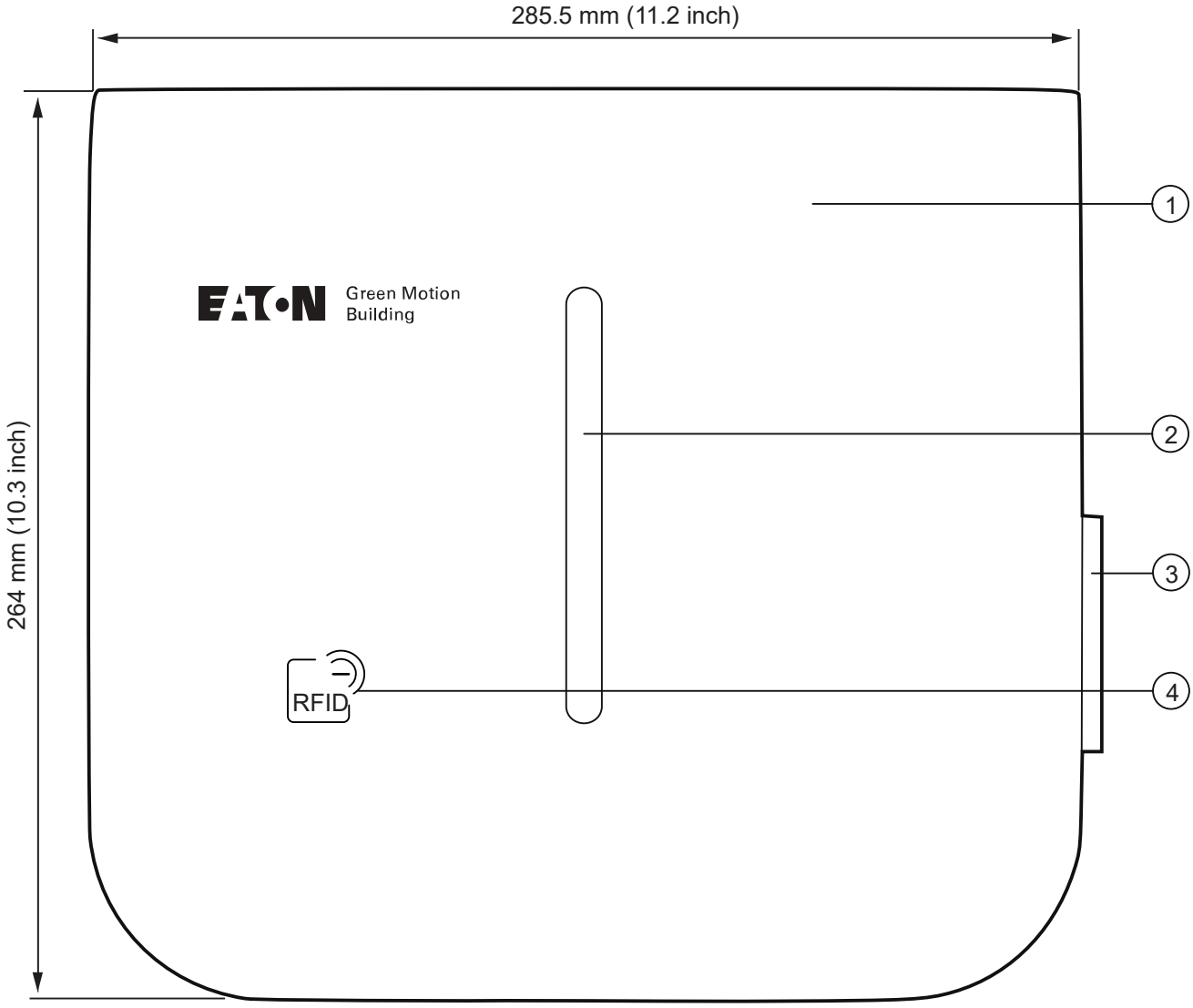

Tag	Description
1	Housing
2	LED status indicator
3	Type 2 socket inlet
4	RFID reader

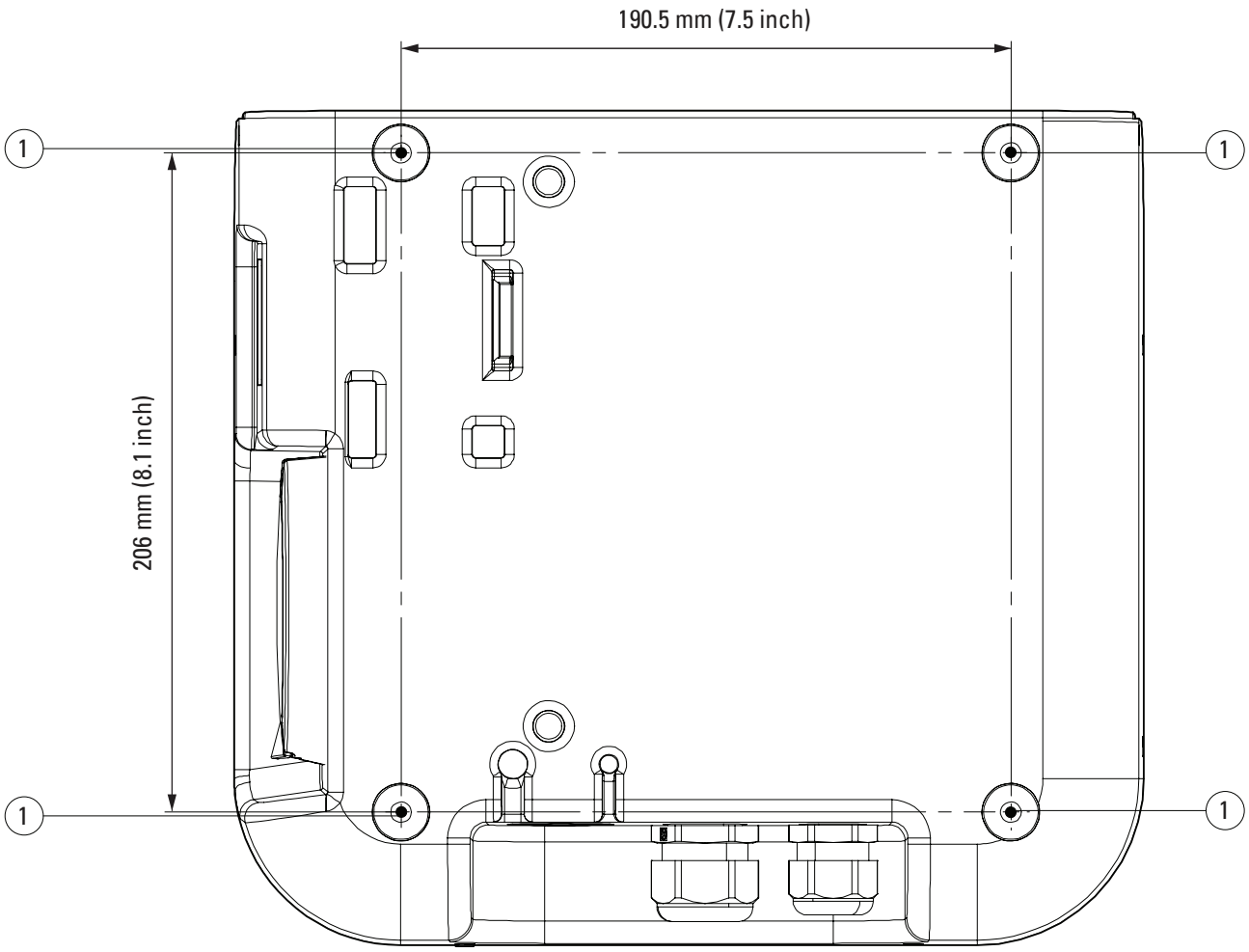

Tag	Description
①	Mounting slots

3.2 Right and left views

Figure 2. Right and left views of the Green Motion Building EV charger

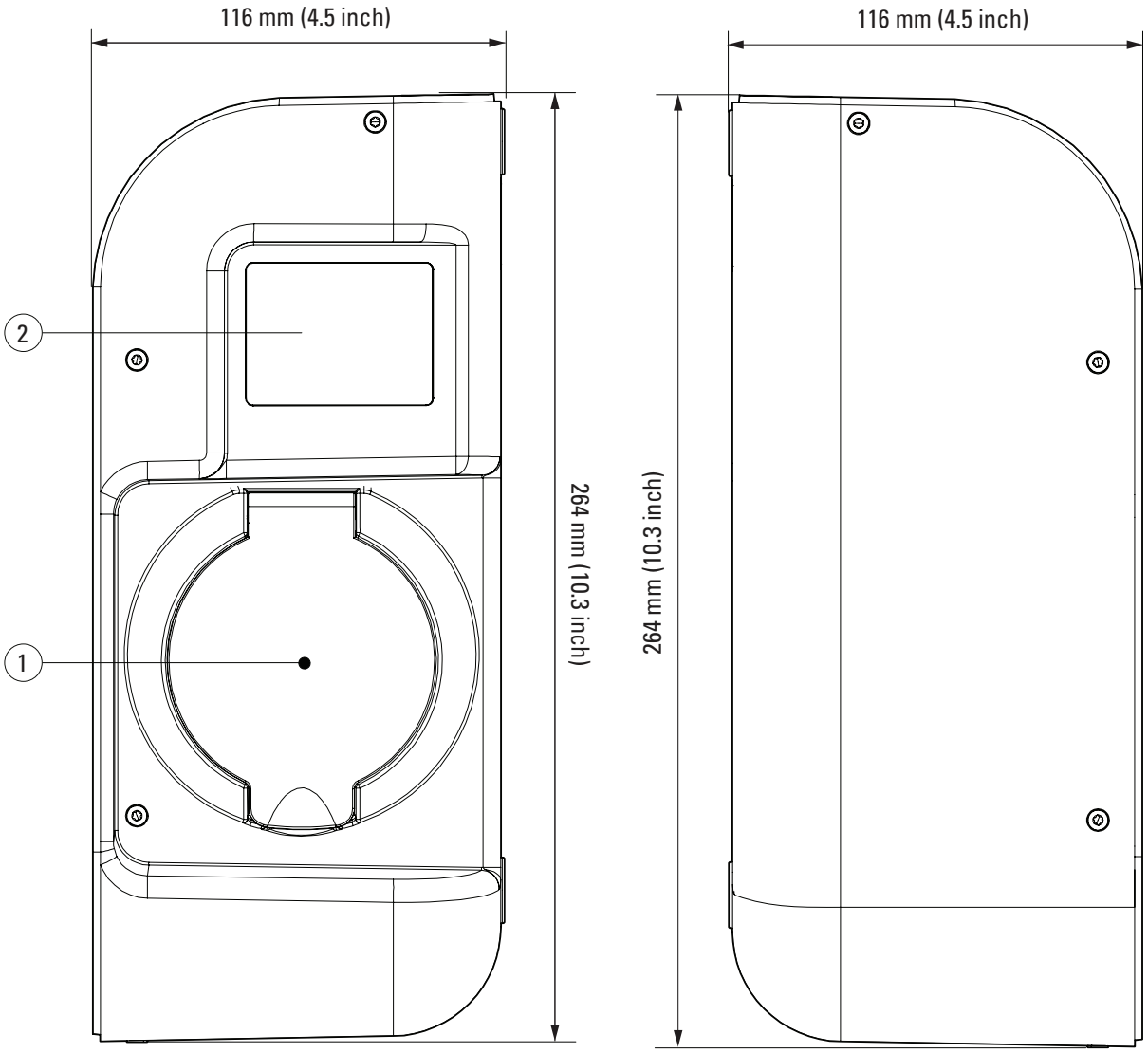

Tag	Description
1	Type 2 socket inlet
2	Energy meter display

3.3 Bottom view

Figure 4. Bottom view of the Green Motion Building EV charger

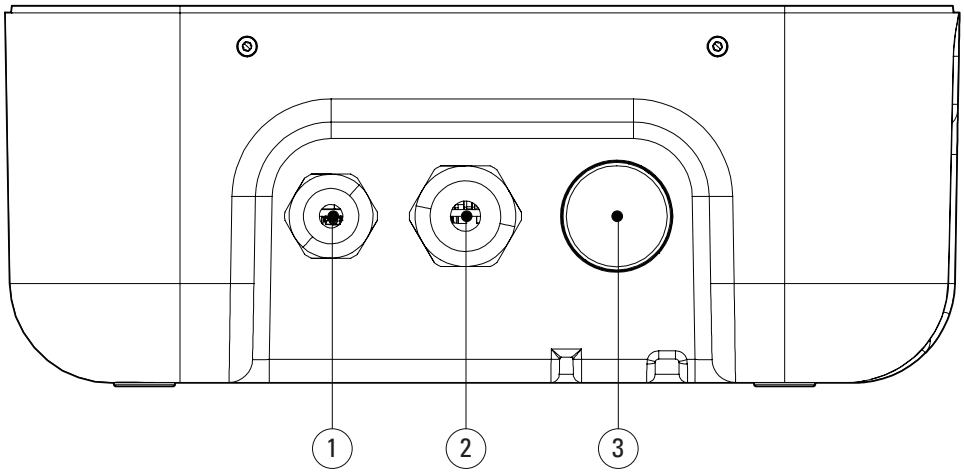

Tag	Description
1	Screw plug M20
2	Cable gland with locking nut M32 (power input)
3	Cable gland with locking nut M32 (cable output for the SKU version with the cable)

3.4 Types of connectors

The Green Motion Building EV charger can be provided with two types of connectors:

1. Type 2 connector with cable (Mode 3), 400 V, 32 A, for either single or three phases
2. Type 2 connector with female socket (Mode 3).

The maximum power output a Type 2 connector can deliver, independently from the EV charger rated power, is 22 kW.

Figure 3. Illustration of a Type 2 connector

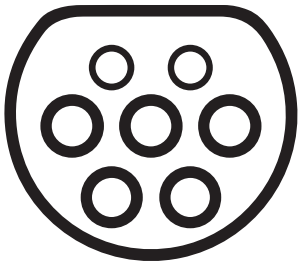

3.5 Energy meter

The MID compliant Green Motion Building EV charger is equipped with the energy meter Iskra WM3M4.

Figure 5. Energy meter display

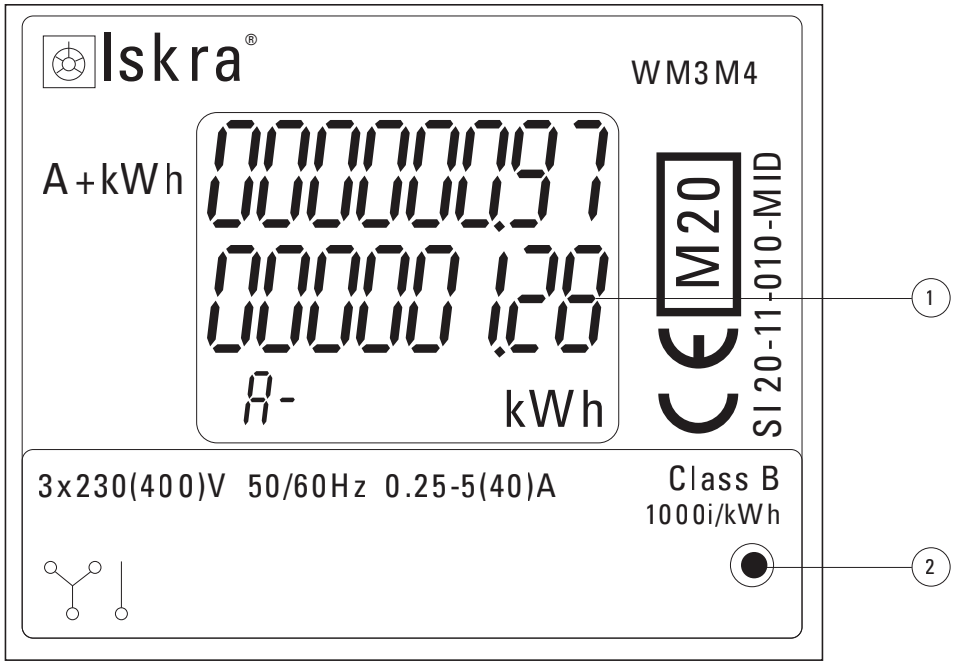

Tag	Description
1	Total energy consumption
2	LED light

First line of the display will always indicate 0. It should be discarded.

Table 4. LED indicator

Energy meter indicator	Description
Energy meter display	The display of the energy meter shows the total energy consumption in kWh since the first switch-on of the EV charger.
	LED light off: no car connected.
	LED light blinking: a car is connected and charging.
	Solid LED light: a car is connected, but not charging.

3.6 Product and accessory references

Table 5. Product references

Reference	Description
GMB2201BBAA00A00	GMB 3.7-22kW T2 Socket MID 4G
GMB2203BAAA00A00	GMB 3.7-22kW 5m T2C MID
GMB2203BBAA00A00	GMB 3.7-22kW 5m T2C MID 4G
GMB2201BAAA00A00	GMB 3.7-22kW T2 Socket MID
GMB2202BAAA00A00	GMB 3.7-22kW T2S MID
GMB2202BBAA00A00	GMB 3.7-22kW T2S MID 4G

Table 6. Accessory references

Reference	Description
XCI3025221	Cable holder
XCI3025021	Floor-mount column for one charger
XCI3025121	Foot-mount column for two chargers
XCI000411	RFID card x 5
GMA02AI000000A00	N.1 Ethernet extender kit
GMA02AL000000A00	N.2 Ethernet extenders kit
GMA02AD000000A00	GM Home & Building Ceiling mounting Single
GMA02AE000000A00	GM Home & Building Ceiling mounting extension for double

4. Relevant information prior to the installation



The installation must be carried out only by professional and qualified personnel.



Installation, commissioning, maintenance or retrofitting of the EV charger must be performed by professional and qualified personnel who are responsible for complying with existing standards and local installation regulations.



During the installation, ensure the equipment is powered off.

4.1 Tools required for the installation

To perform the installation, professional and qualified personnel should have the following tools:

- Spirit level
- Pencil
- Torx T-10 screwdriver
- Flat-head screwdriver
- Tongue-and-groove plier
- Drilling machine
- RJ45 crimp tool (if an Ethernet connection is needed).

4.2 Checking the box contents

The Green Motion Building EV charger box should contain the following parts:

- Green Motion Building EV charger
- Quick start guide
- Safety guidelines
- Drilling template
- Four adhesive gaskets
- Ethernet extension cables (2 pcs)
- Spacers (included in the T2S version of the EV charger)
- Floor-mount column (optional)
- Cable holder (optional).



The quick start guide contains QR code for the EV charger Wi-Fi hotspot password on the first page. This password is unique for the device and is needed to connect to EV charger while commissioning. The password should be stored safely for future use.

4.3 Dimensions and weight

Table 7 shows the dimensions and weight of the Green Motion Building EV charger.

Table 7. Dimensions and weight of the Green Motion Building EV charger

EV charger	
Dimensions (W x H x D) in mm	285.5 x 264 x 116
Weight in kg with cables (max.)	8

4.4 Lifting, transportation and unloading instructions

Transportation and handling

Transportation of the equipment, especially on the road, must be carried out in such a way as to protect the system components (especially electronic components) from major impacts, humidity, vibrations, etc.

During handling, sudden or fast movements that could cause the system to sway dangerously must be avoided.

Lifting

Eaton packs and protects each component by using devices that ease its transportation and handling. These operations must be carried out by professional and qualified personnel specialized in loading and unloading components.

The ropes and vehicles used for lifting must be able to withstand the weight of the equipment. Do not lift multiple units or parts of the equipment at the same time, unless otherwise advised. The Green Motion Building EV charger is not equipped with specific lifting tools.



Do not underestimate the weight of the Green Motion Building EV charger; check the technical specifications.

Do not move or stop the hanging load above people or things.

Do not let it drop with too much force.

4.5 Unpacking



Remember that the packaging elements (cardboard, cellophane, staples, adhesive tape, straps, etc.) can cause cuts and/or injuries, if not handled with care. They must be removed with appropriate tools and must not be handled by non-responsible people (i.e. children).

The packaging components must be removed and disposed of in accordance with the local regulations and laws of the country of installation.

Check the integrity of the packaging before opening.

Open the packaging and remove the Green Motion Building EV charger carefully to avoid damaging the external casing or the internal electronic parts.

Before commissioning, ensure that the external casing of the Green Motion Building EV charger is in good condition and free from damage sustained during transportation.

5 Mounting and installation

5.1 Positioning the Green Motion Building EV charger

The installation position of the Green Motion Building EV charger must meet the following conditions:

- The EV charger must be installed in a place with relative humidity below 95 %.
- Optimal operation of the EV charger is in the temperature range -25 °C to +45 °C.
- Install the EV charger to ensure easy access to the controls and connections.
- The surface of the wall where the EV charger will be installed must be able to take its weight (max. 8 kg).
- The EV charger must be used below a maximum altitude of 2000 m above sea level.
- If the EV charger is targeted to be used by disabled people, refer to national requirements for charging station accessibility.
- If the user does not use a wheelchair, a height of 1500 mm from ground level is optimal.
- The power supply cable and the communication cable are introduced through the cable glands on the bottom of the EV charger.



Do not mount the EV charger above or under flammable building materials.

Do not install the EV charger in areas where highly flammable substances are present.

Do not install the EV charger in areas subject to explosion hazard.



To prevent the risk of electric shock or other injury, check that there are no electrical or hydraulic lines in the walls before drilling the mounting holes of the EV charger.



Make sure there is enough free space for air circulation around the EV charger. Local regulations may require larger clearances. It is also recommended that the Green Motion Building T2/T2S version of the EV charger be mounted with spacers when installed on the wall to ensure free access to the charging socket.



Eaton is committed to minimizing the cybersecurity risk in its products and deploying cybersecurity best practices in its products and solutions, making them more secure, reliable, and competitive for customers. For more information related to secure installation, please refer to product documentation at www.eaton.com/greenmotionbuilding

5.2 How to open/close the housing of the Green Motion Building EV charger

Before attempting to open the EV charger, make sure that the cable is disconnected from the EV, the external AC-line main switch is off, and the circuit breakers are open.

When removing the front cover, be careful not to damage the cable connections.

Follow these steps to open the Green Motion Building EV charger housing:

Step 1. Unscrew the eight screws of the EV charger housing.

Figure 6. Location of the eight screws of the Green Motion Building EV charger housing

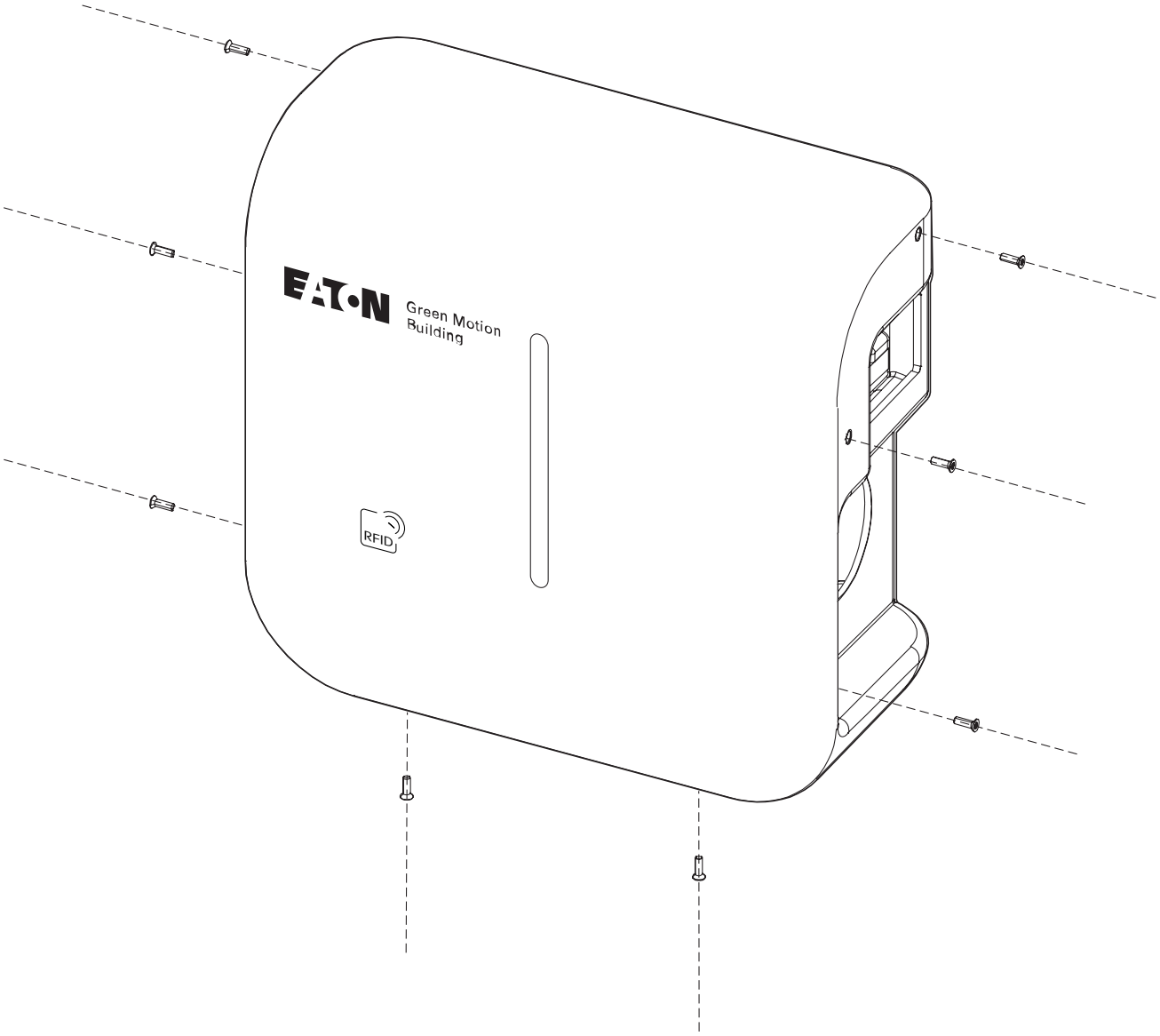

Step 2. Lift and carefully remove the front cover. Do not break any cables from the electrical board.

Step 3. Disconnect the connection cables from the front cover.

To close the EV charger housing, proceed by following these steps:

Step 1. Ensure there are no loose wiring connections.

Step 2. Reconnect the cables to the front cover (for the LED strip and the RFID reader).

Figure 7. Front cover with the LED strip and RFID reader PCBs

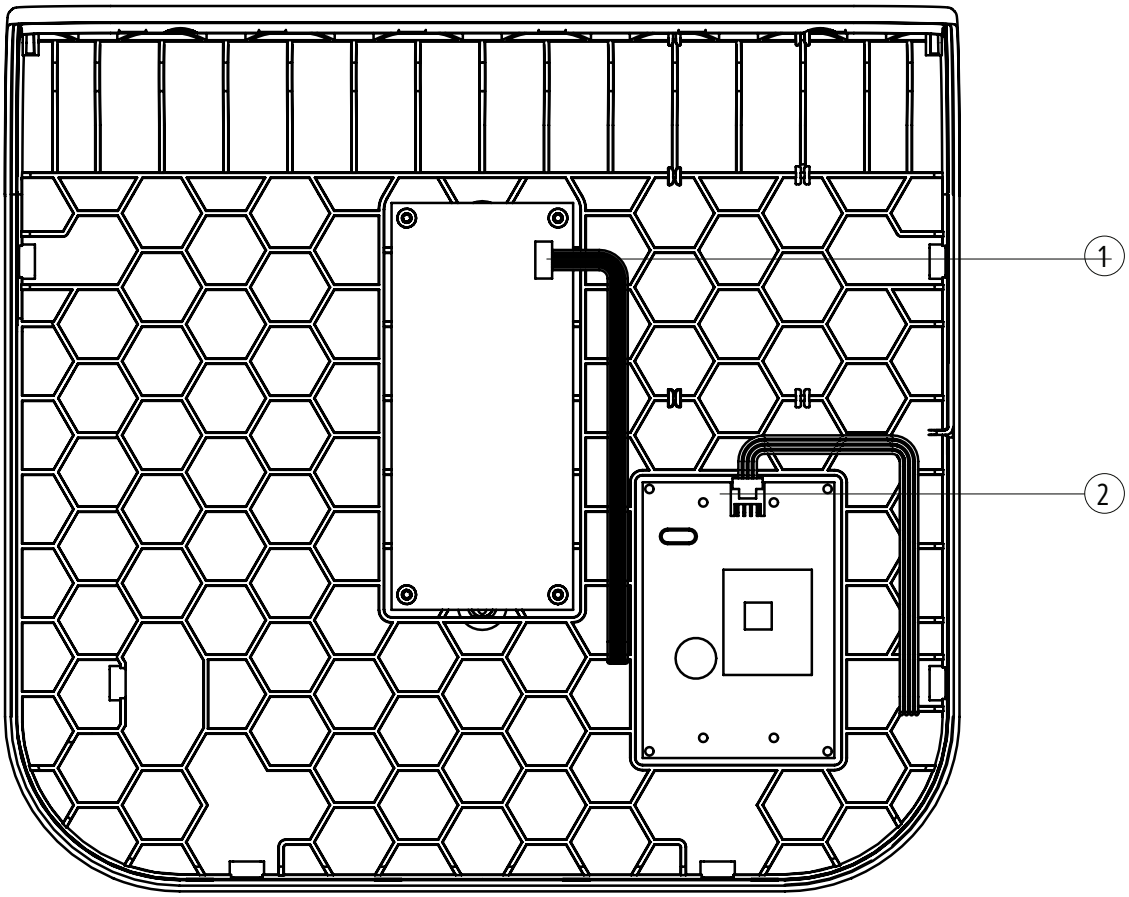

Tag	Description
①	LED strip cable connector
②	RFID reader cable connector

Step 3. Place the front cover back on the EV charger and secure it with the screws.

5.3 Mounting

The EV charger can be mounted directly onto the wall or on a floor-mounted column (optional).

Step 1. Use a spirit level to place the drilling template level on the wall. Make sure the template's top is at a height of 1500 mm from ground level, for optimal accessibility.[1]

Step 2. Mark the holes with a pencil and remove the drilling template.

Step 3. Drill four holes in the wall as shown in Figure 8.

Step 4. Place four gaskets around the four slots on the outside of the unit, as shown in Figure 9. The T2S socket version of the product should be installed using the provided spacers, as illustrated in Figure 10.

Step 5. Fix the unit to the wall with four ø 6-mm screws.



Please note that the appropriate type of wall plugs and screws must be selected by professional and qualified personnel, based on the following considerations:

- the installation location,
- the type of the wall on which the EV charger is to be mounted.

This is to ensure the safest possible mounting of the Green Motion Building EV charger.

The power supply cable is introduced through the cable gland on the bottom of the EV charger.

[1] Refer to national requirements to make the EV charger accessible to disabled people.

Figure 8. The Green Motion Building EV charger drilling template on wall

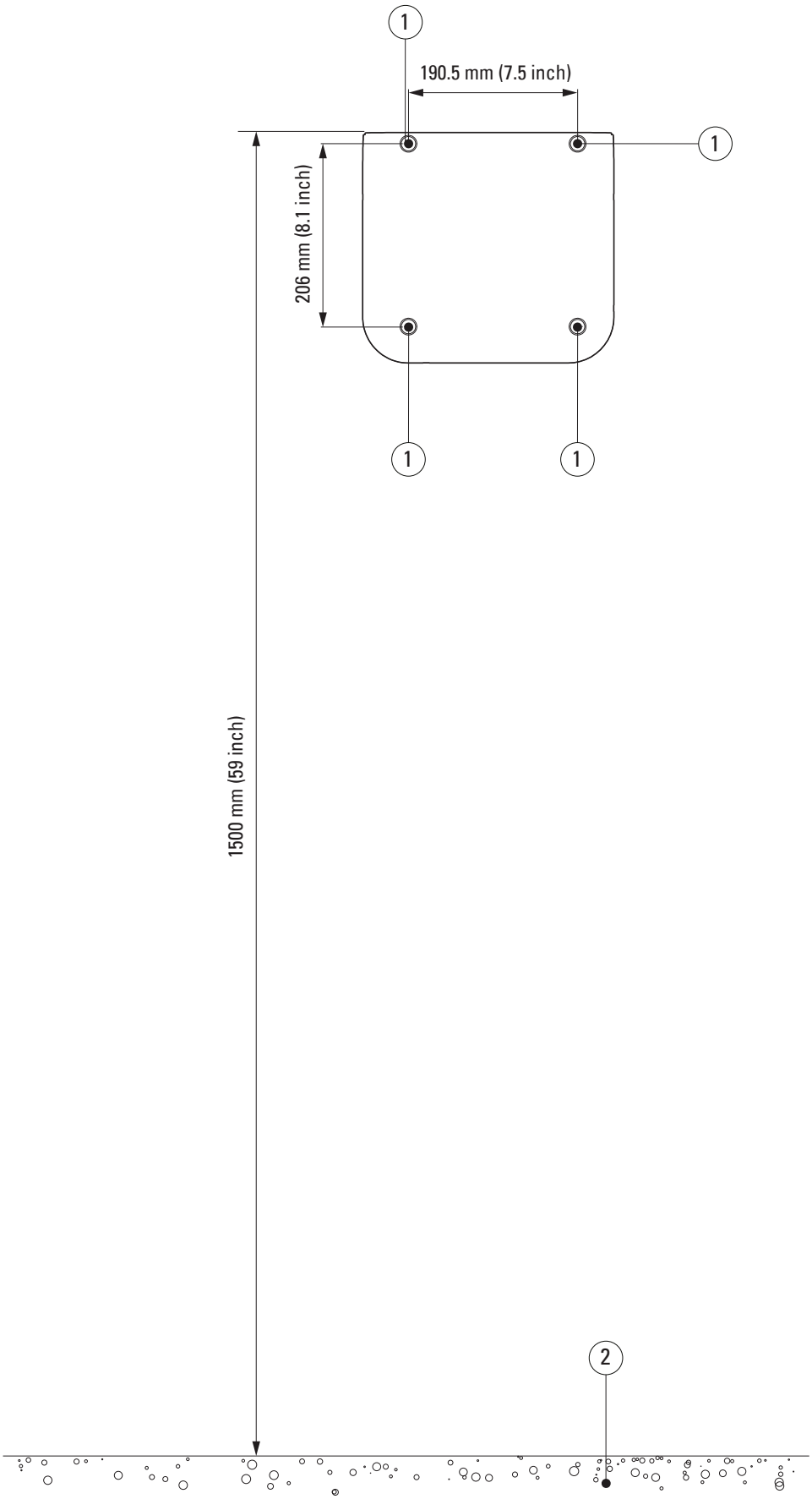

Tag	Description
1	Hole
2	Floor

Figure 9. How to mount the Green Motion Building EV charger to a wall

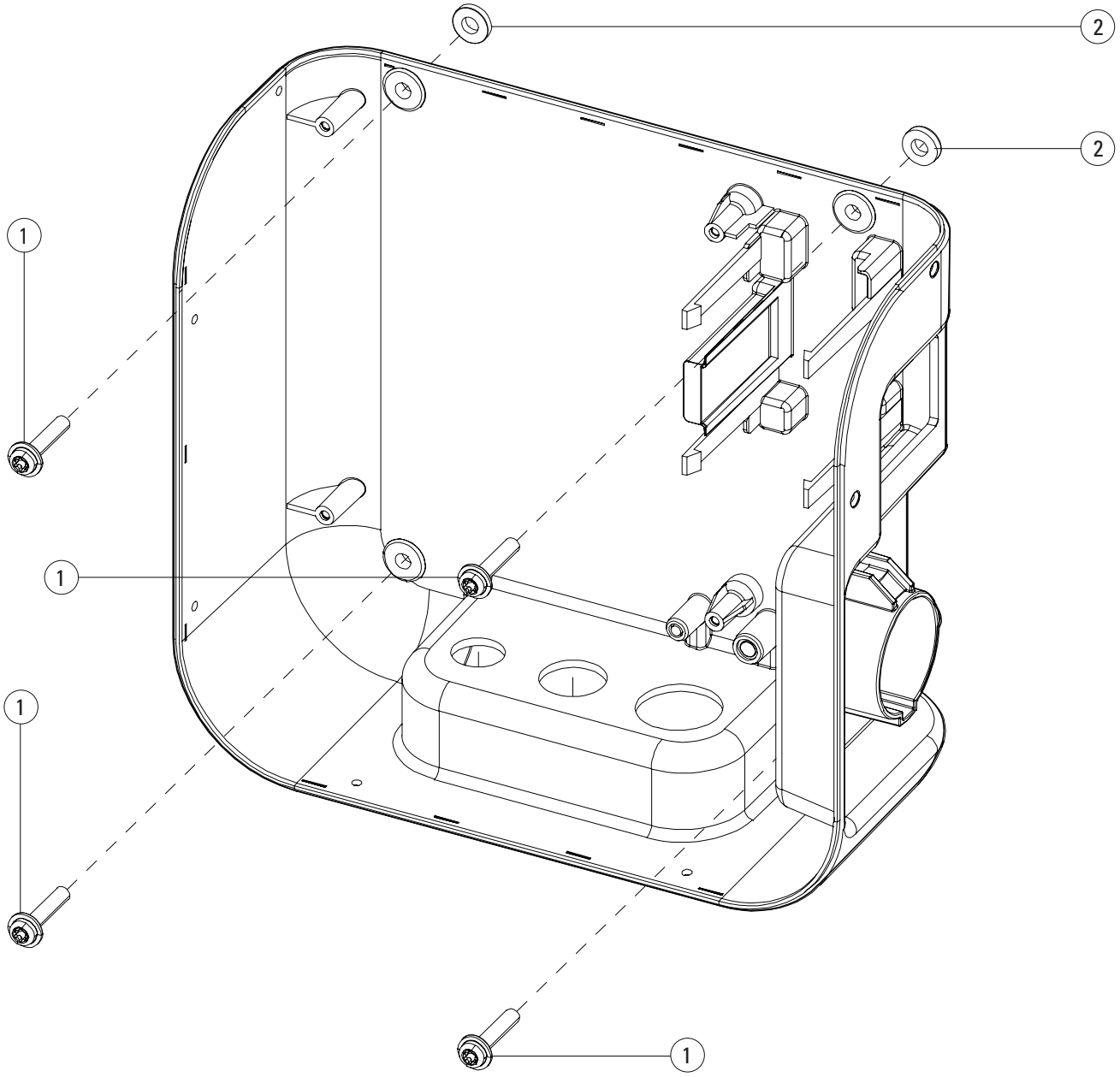

Tag	Description
①	Screws
②	Adhesive gaskets

Figure 10. How to mount the Green Motion Building EV charger (T2S version) on a wall

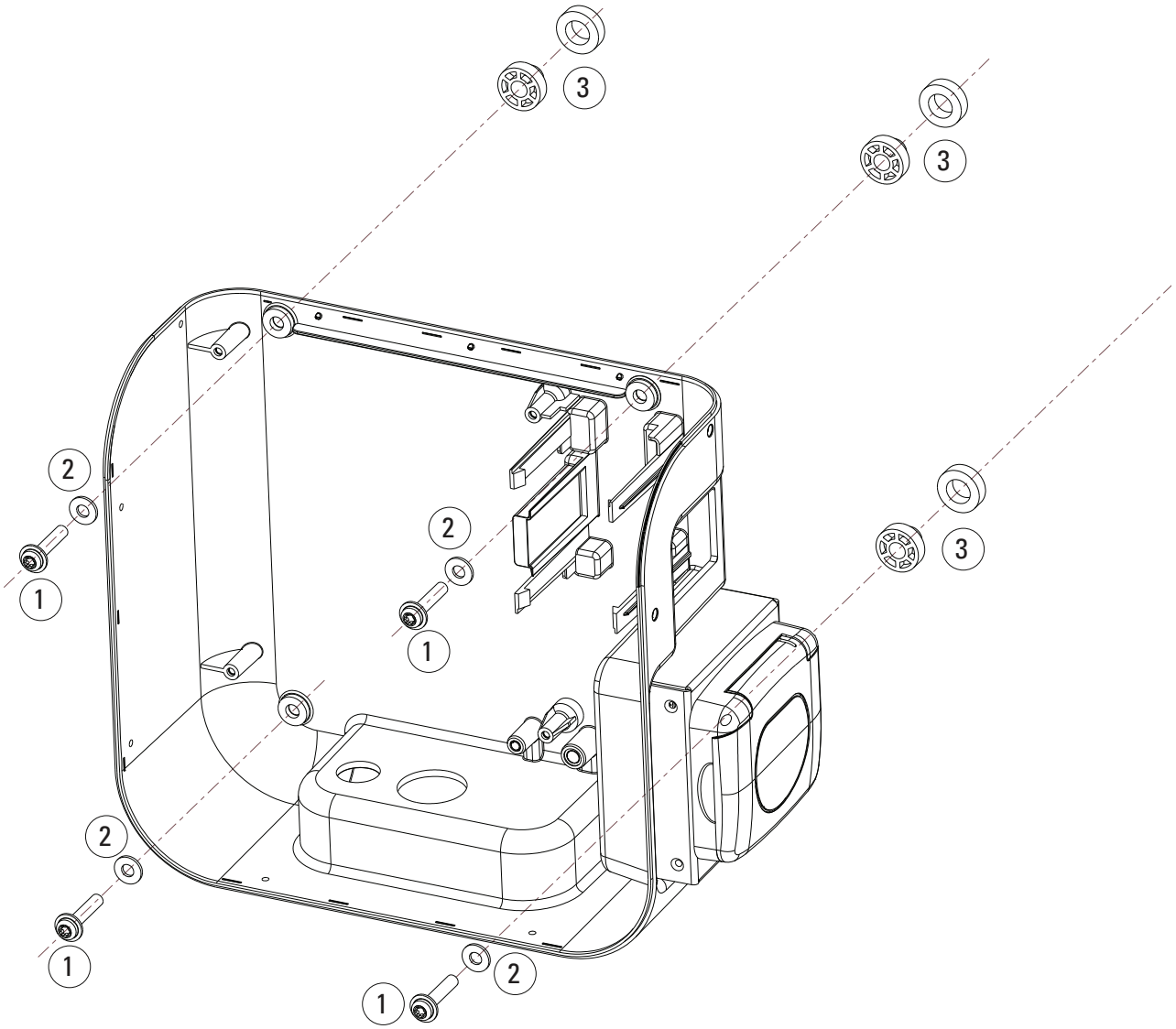

Tag	Description
①	Ø6 mm screws
②	Gaskets
③	Spacers

Figure 11. How to mount the Green Motion Building EV Charger (T2S version) with the cable holder on a wall

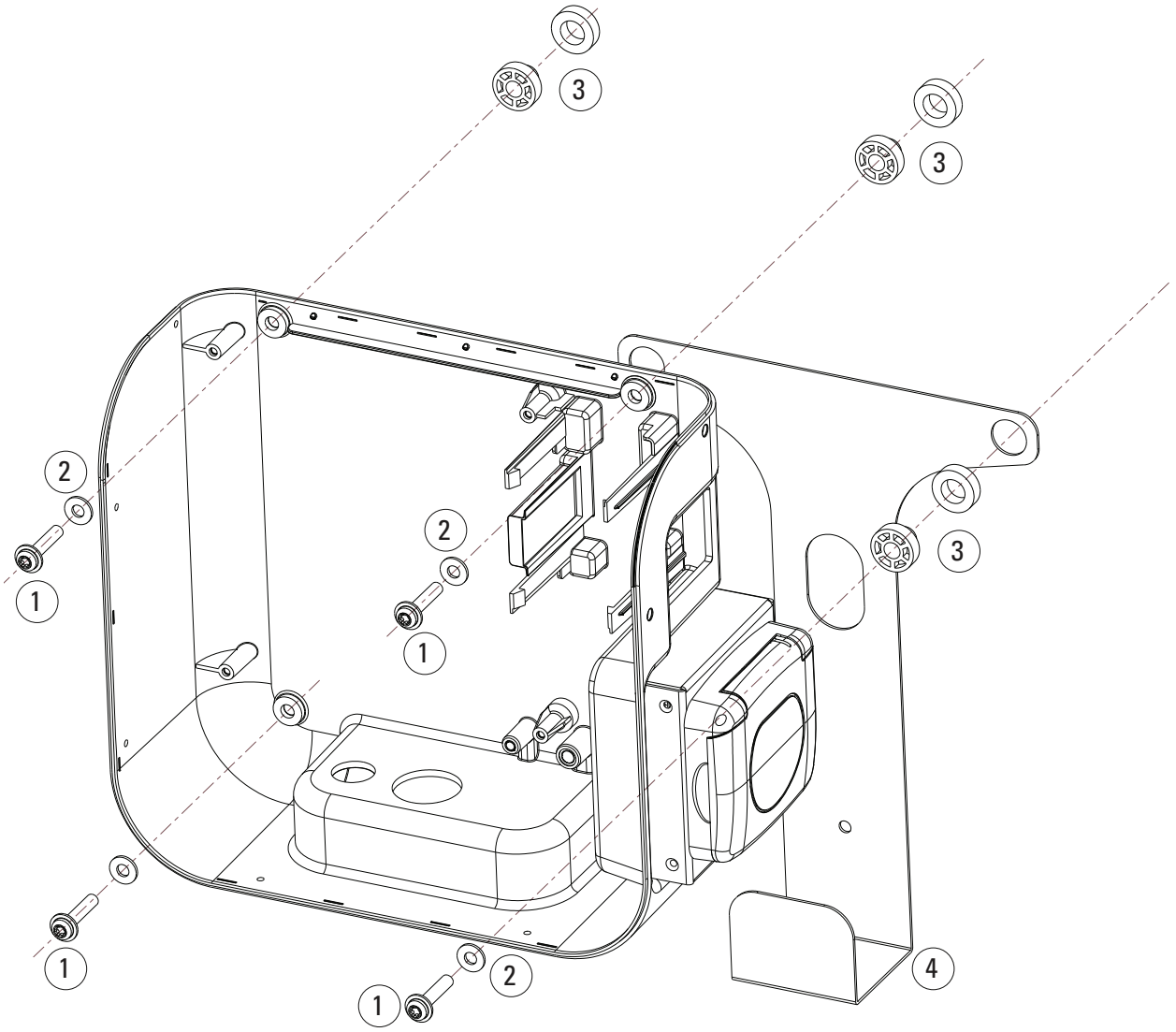

Tag	Description
1	Ø6 mm screws
2	Gaskets
3	Spacers
4	Cable holder

Electronic boards should not be removed for mounting the unit on the wall. The image is for illustration purposes only.

6. Electrical and network connections

6.1 Caution



Installation, commissioning, maintenance or retrofitting of the EV charger must be performed by professional and qualified personnel, who are responsible for complying with existing standards and local installation regulations.



For safety reasons, an appropriately rated input load disconnector must be provided for each individual product. No load should be connected directly to the product during installation.



Connect only one EV charger for each circuit breaker and residual current device (RCD) (if required by local regulations). The circuit breaker serves as a mains disconnector.



The protective earth conductor must have a cross-section at least equal to or greater than the cross-section of the cables for connection to the public grid (AC) and in accordance with the requirements of local regulations.



Before starting connection operations, ensure that the external AC-line main switch is disconnected, and circuit breakers are open.



Any operation requiring the main converter box to be opened can lead to electric shock hazards.

6.2 Standard wiring

To connect the EV charger to the electrical panel, professional and qualified personnel should consider the following guidelines and refer to Table 8.

Table 8. Overview of parameters for dimensioning of the protective devices and power supply line

Green Motion Building model	Green Motion Building 22 kW			
Green Motion Building power range	3.7 kW	7.4 kW	11 kW	22 kW
Charging current limitation	16 A	32 A	16 A	32 A
Input voltage	230 V	230 V	400 V	400 V
Power supply terminal block max. section [2]	10 mm^2	10 mm^2	10 mm^2	10 mm^2
Type A RCD protection at panel according to IEC 61851-1:2017 [3]	30 mA	30 mA	30 mA	30 mA
Rated current at panel	20 A	40 A	20 A	40 A

[2] Rigid wires are recommended for the power supply. These cross sections must be re-assessed by professional and qualified personnel depending on the length of the wires.

[3] Always refer to your local installation regulations.

The power losses on the power supply line must be less than +/- 10 percent of the rated power in accordance with IEC 60038 and local standards. Hence, the cable sections or line length must be reassessed by professional and qualified personnel in accordance with maximum power loss regulations. Also, when dimensioning the power supply line, observe the possible reduction factors and the increased environmental temperatures inside the connection area of the EV charger. See the temperature rating of the supply terminals. Under certain circumstances, this can increase the cable cross-section and change the temperature resistance of the power supply line.

Professional and qualified personnel must define the types of RCD and circuit breaker.

Each EV charger must be connected via a separate RCD/fault-current circuit breaker. No other consumers may be connected to this circuit.

The circuit breakers and the power cable minimal cross-sections should be defined by professional and qualified personnel.

During installation, other important issues such as “cascading” of RCDs and selection of a suitable line circuit breaker must be considered.

When dimensioning the line circuit breaker, the increased ambient temperatures in the control cabinet must also be considered. Under certain circumstances, this can make a reduction of the charging current specification necessary in order to increase the system availability.

The electrical connection is made on the power supply terminals located at the bottom of the charger. Refer to Figure 12 to wire the EV charger to the power supply.

Figure 12. The Green Motion Building EV charger wiring diagram

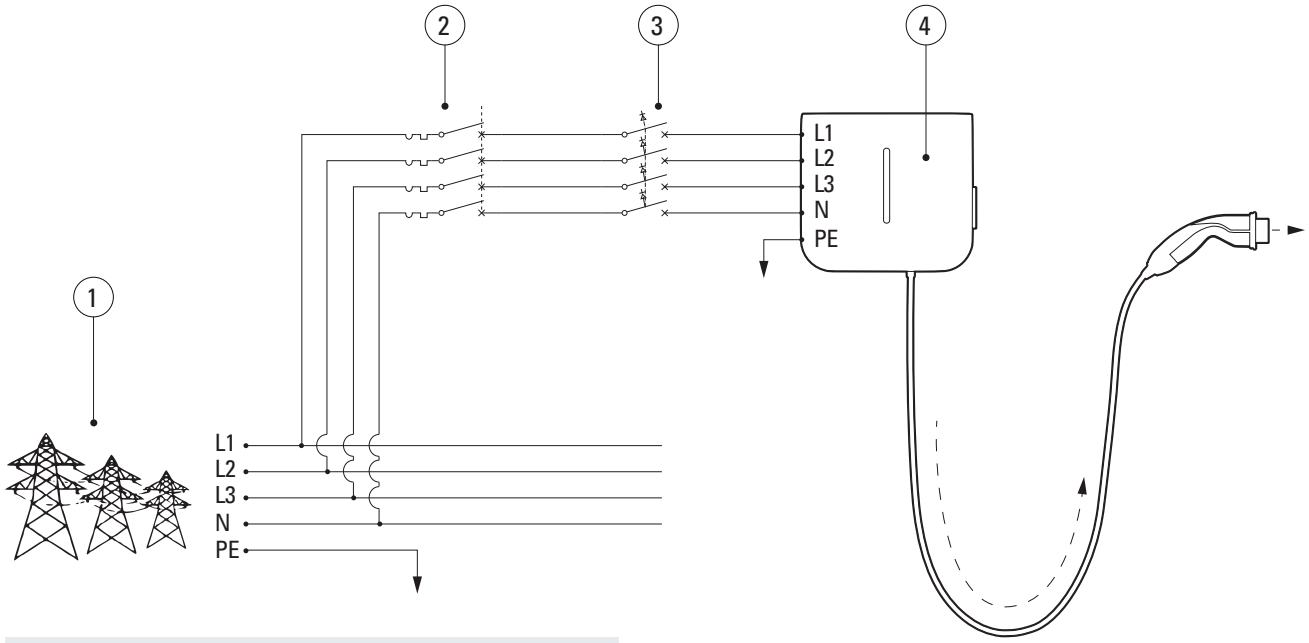

Tag	Description
1	Grid
2	Circuit breaker
3	Type A RCD according to IEC 61851-1:2017
4	Green Motion Building EV charger

The circuit breaker and the RCD function can be combined by the use of an appropriate RCBO.

Eaton recommends the use of the following equipment as protective devices.

Table 9. Eaton recommendations for protective devices for the Green Motion Building EV charger

Type	Reference
40 A breaker for the three-phase 32 A charging current	PLSM-C40/3N-MW
20 A breaker for the three-phase 16 A charging current	PLSM-C20/3N-MW
RCD type A for the three-phase 32 A charging current	PFIM-40/4/003-A-MW
RCD type A for the three-phase 16 A charging current	PFIM-25/4/003-A-MW
20 A RCBO (MCB+RCD Type A) for the three-phase 16 A charging current	MRB4-20/3N/C/003-A
20 A breaker for single-phase 16 A charging current	EMCH120
40 A breaker for single-phase 32 A charging current	EMCH140



The installer should refer to local installation regulations to select the correct protection device.

6.3 Electrical connection and terminals



It is prohibited to connect the unit terminals to a circuit with a 3-phase IT grid configuration.

Before starting the connection operations, ensure that the external AC-line main switch is disconnected, and circuit breakers are open.

Step 1. Open the housing of the Green Motion Building EV charger. Refer to subsection 5.2 of this manual for detailed instructions.

Step 2. Insert the power supply cable through the cable gland on the bottom of the EV charger. Remove the cable glands, if necessary.

Step 3. Connect the wires of the AC grid to the top or the bottom of the power supply terminals.



In case of three phases, connect the phase (L1, L2, L3), neutral (N) and earth (PE) wires of the AC (distribution) grid to the power supply terminal block in the Green Motion Building EV charger,
respecting the correct assignment:

- Phase (L1) ▯ L1 terminal
- Phase (L2) ▯ L2 terminal
- Phase (L3) ▯ L3 terminal
- Neutral (N) ▯ N terminal
- Earth (PE) ▯ PE terminal



In case of single phase, connect the phase (L1 OR L2 OR L3), neutral (N) and earth (PE) wires of the AC (distribution) grid to the power supply terminal block, respecting the correct assignment:

- Phase (L1) OR Phase (L2) OR Phase (L3) ▯ L1 terminal
- Neutral (N) ▯ N terminal
- Earth (PE) ▯ PE terminal



Be careful not to confuse the phases with the neutral. The device can malfunction in case of incorrect wiring.



The electronic platform does not need to be dismantled to perform wiring. Doing so will void the product warranty.

Figure 13. Overview of power supply terminal block inside the Green Motion Building EV charger with connected phase (L1, L2, L3), neutral (N) and earth (PE) wires

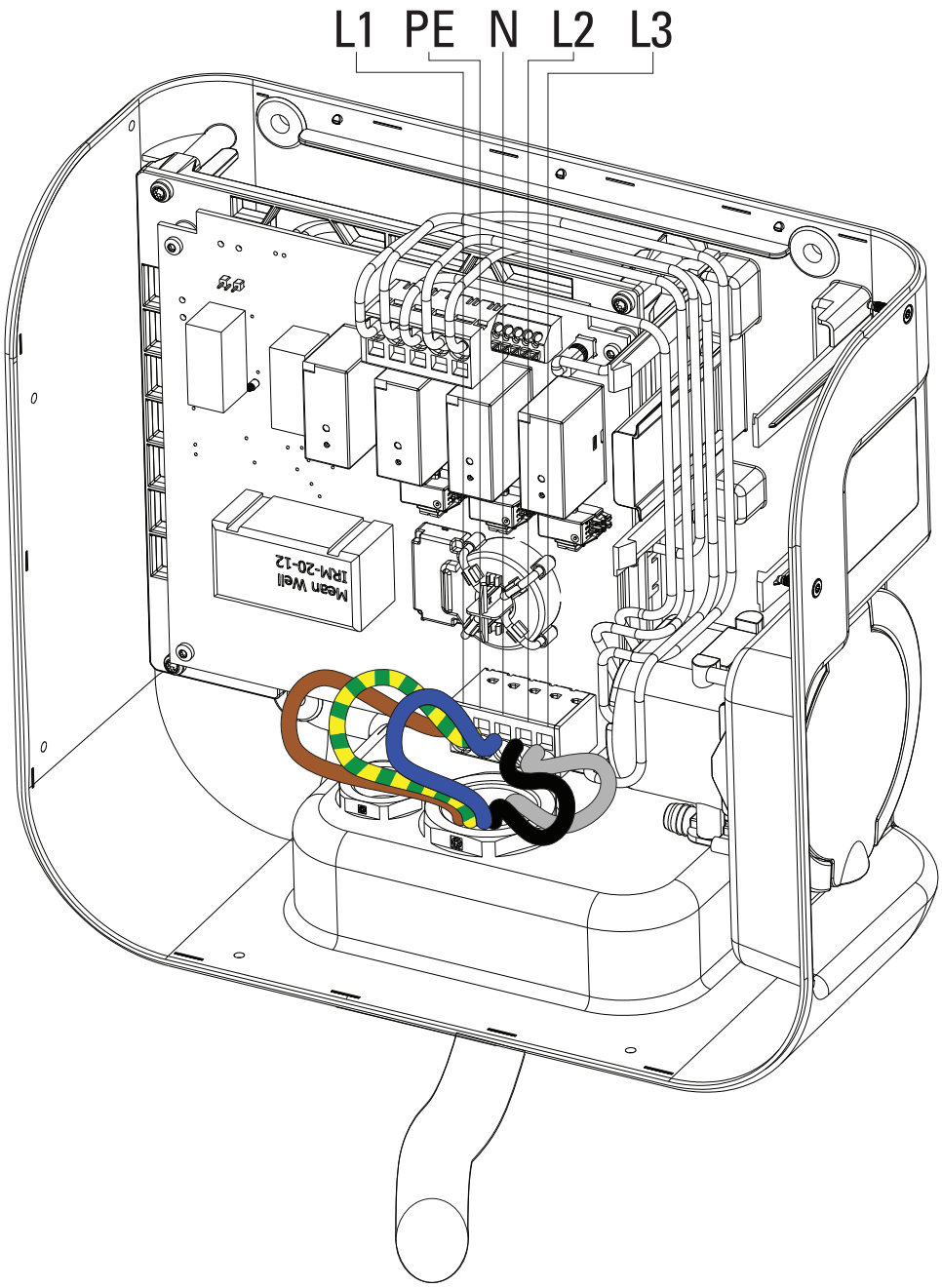

Figure 14. How to wire AC distribution grid wires to the power supply terminal of the Green Motion Building EV charger

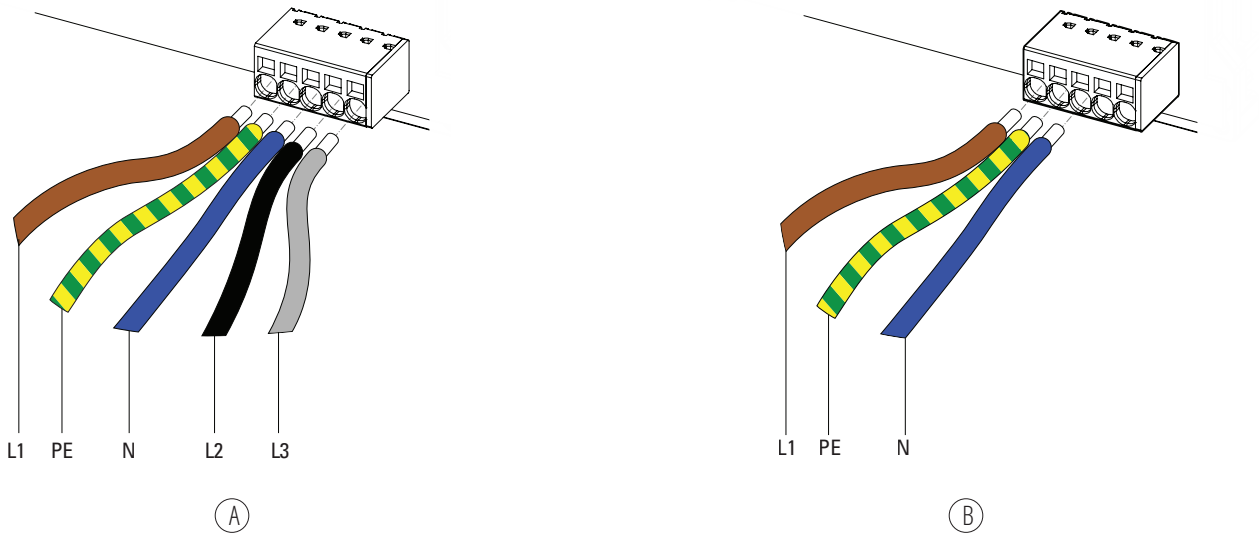

Tag	Description
A	Three-phase terminals L1, L2, L3, N and PE
B	Single-phase terminals L1, N and PE

6.4 Charging current limitation

By default, the charging current is limited to 32 A for the Green Motion Building 22 kW EV charger.

In case the maximum capacity of the electrical installation is lower than 32 A, the maximum charging current for the Green Motion Building EV charger can be reduced through a DIP switch located on the backside of the Green Motion Building front cover.

In the event of damage caused by improper current adjustment, the product guarantee is void and no returns will be accepted. Eaton declines any responsibility for improper current adjustment and cannot be liable for any inappropriate operation.

To limit the maximum charging current for the Green Motion Building EV charger, follow these steps:

Step 1. Open the housing of the Green Motion Building EV charger. Refer to subsection 5.2 of this manual for detailed instructions.

Step 2. Locate the DIP switch on the LED-panel on the backside of the Green Motion Building EV charger front cover. See Figure 15.

Step 3. Determine the maximum capacity of the electrical installation in which the Green Motion Building EV charger is installed.

Step 4. Use Table 10 to select a maximum charging current for the EV charger LOWER than the maximum capacity of the electrical installation and configure the DIP switch accordingly.

Please note: the switch positions in Table 10 are given for an orientation where the label DP1 is located on the left side of the switch.

Step 5. Close the housing of the Green Motion Building EV charger.

Figure 15. LED-Panel (PCB) located on the backside of the Green Motion Building EV charger front cover

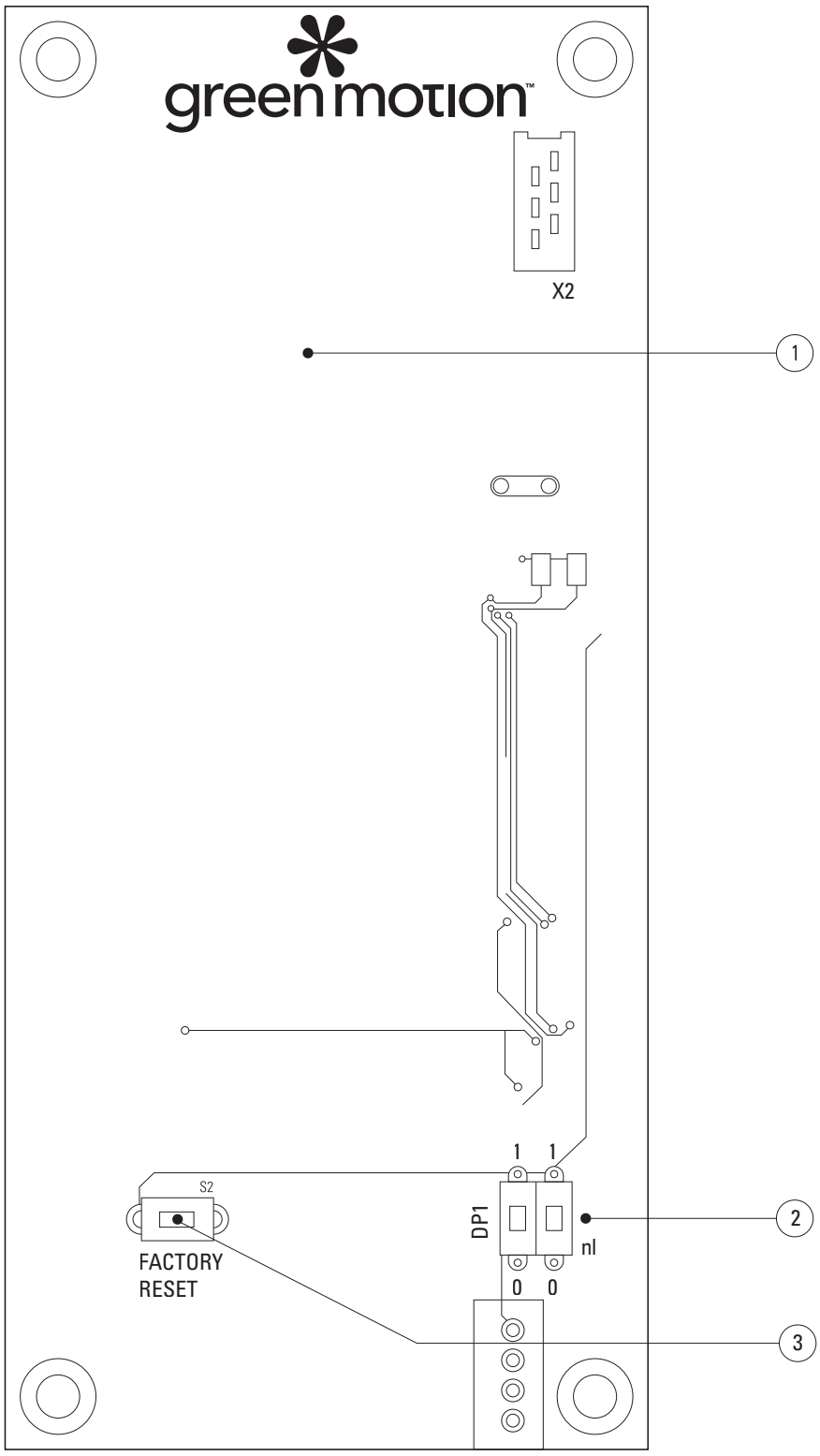

Tag	Description
①	LED panel (PCB)
②	DIP switch 1 to limit the output power
③	Emergency factory reset button

Table 10. Configuration to limit maximum capacity of the EV charger

Green Motion Building EV charger version: 22 kW	Switch position
16 A	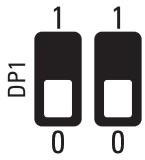
20 A	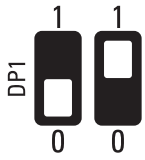
26 A	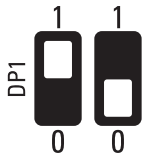
32 A (Default configuration)	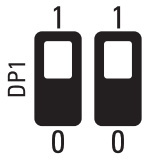

In the event of damage caused by improper current adjustment, the product warranty is void and no returns will be accepted. Eaton declines any responsibility for improper current adjustment and cannot be liable for any inappropriate operation.

6.5 Installation of an external switching device

Some local regulations requires that the EV charger can execute an emergency stop in case of contactor failure.

In Italy and the Netherlands, it is also required by IEC 61851-1 that EV chargers equipped with no-shutter outputs (cable or T2 socket) can execute an emergency stop in case of contactor failure.

In order to execute an emergency stop, the circuit breakers of the Green Motion Building EV charger need to be equipped with a tripping coil/shunt trip, a device designed to switch the circuit breakers off remotely. The shunt trip should have a DC voltage rating of 24 V and should be connected on the supply lead control wire, connected to the E terminal of the EV charger. See the wiring diagram in Figure 16.

6.5.1 Grid connection

Connect the EV charger to the electrical panel with the protections as per Table 11.

Table 11. Recommendations for protections for the Green Motion Building EV charger

Green Motion Building EV charger model	Green Motion Building 22 kW EV charger			
Green Motion Building power range	3.7 kW	7.4 kW	11 kW	22 kW
Charging current limitation	16 A	32 A	16 A	32 A
Input voltage	230 V	230 V	400 V	400 V
Power supply terminal block max section [4]	10 mm^2	10 mm^2	10 mm^2	10 mm^2
RCD protection at panel according to IEC 61851-1:2017 [5]	30 mA type A	30 mA type A	30 mA type A	30 mA type A
Circuit breaker at panel	20 A	40 A	20 A	40 A

[4] Rigid wires are recommended for the power supply. These cross sections must be re-assessed by professional and qualified personnel depending on the length of the wires.

[5] Always refer to your local installation regulations.

Refer to Section 6.2 for recommendations regarding the connection to the grid.

If the earthing system is a TT or a TN, the ground resistance must not exceed 100 Ohms. Power supply can be protected with a surge protection device type 2.

Figure 16. The Green Motion Building EV charger wiring diagram with external switching device

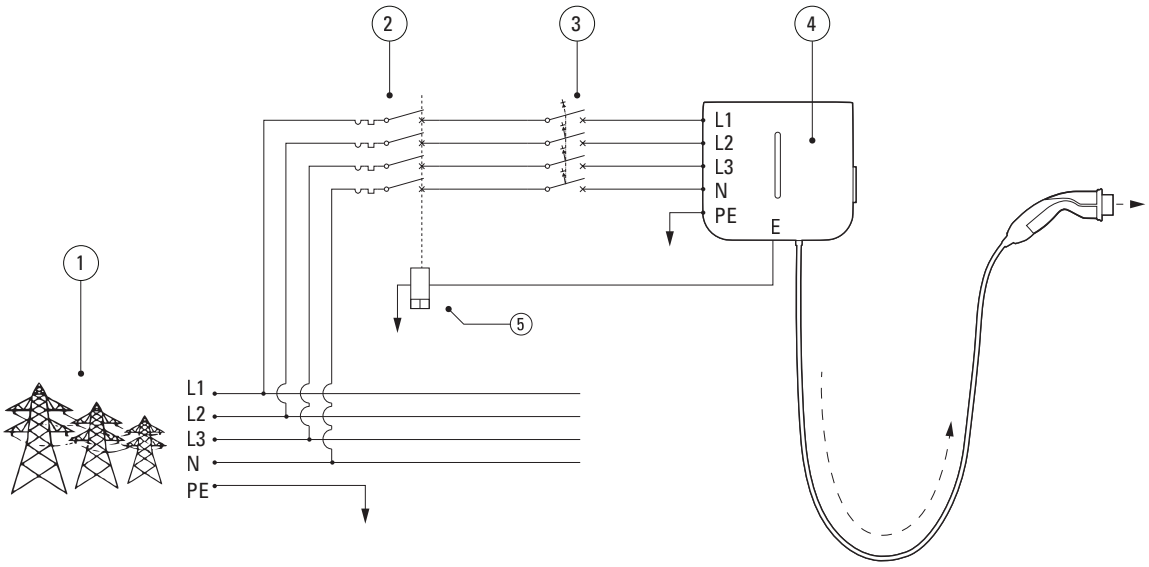

Tag	Description
1	Grid
2	Circuit breaker
3	Type A RCD according to IEC 61851-1:2017
4	Green Motion Building EV charger
5	Shunt trip

6.5.2 Installation of an external switching device

Eaton recommends the use of the following tripping coil/shunt trip:

Table 12. Recommended tripping coil/shunt trip

Type	Eaton reference
Tripping coil/Shunt Trip	ZP-ASA/24

Please be advised that the recommended tripping coil/shunt trip ZP-ASA/24 will not fit onto a one module sized, 1P+N circuit breaker.

The terminal E (Emergency) is located on the control unit.

To connect your shunt trip to the Green Motion Building. EV charger follow these steps:

Step 1. Ensure unit is powered off and load is disconnected.

Step 2. Wire the mating connector. Mating connector reference:

- Manufacturer: Weidmuller (Pluggable Terminal Blocks B2L 3.50/20/180 SN BK BX)
- Manufacturer part number: 1727710000

The mating connector is not provided with the charger and is to be obtained separately.

Figure 17. Mating connector with wiring connections

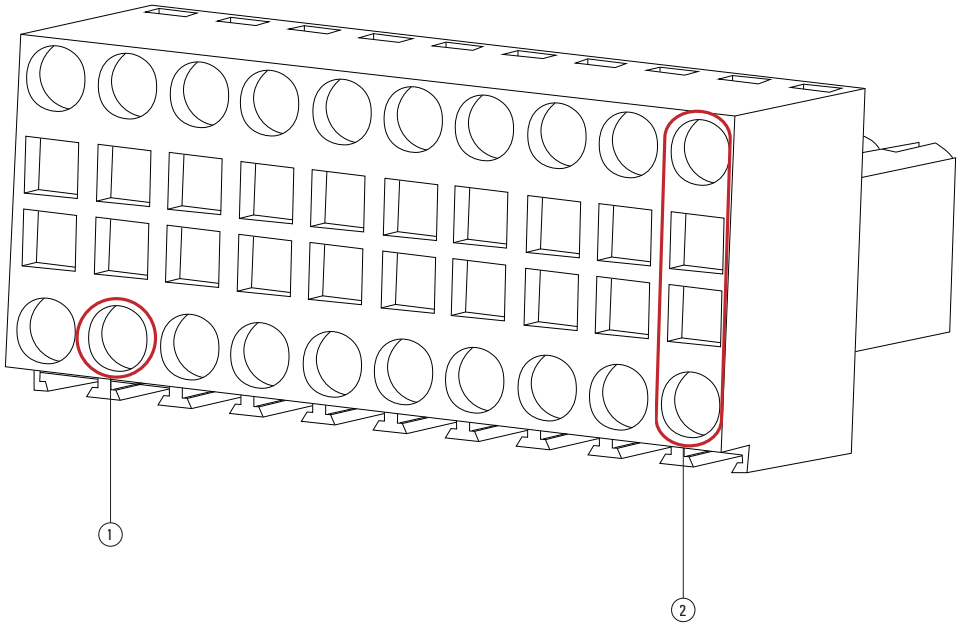

Tag	Description		
1	Pin 4	→	E
2	Pin 19, 20	→	GND (shunt trip)

Step 3. Open the Green Motion Building. EV charger. See section 5.2.

Step 4. Locate the mating connector (J9 header) on the AC platform (refer to Figure 18).

Figure 18. Location of the AC platform

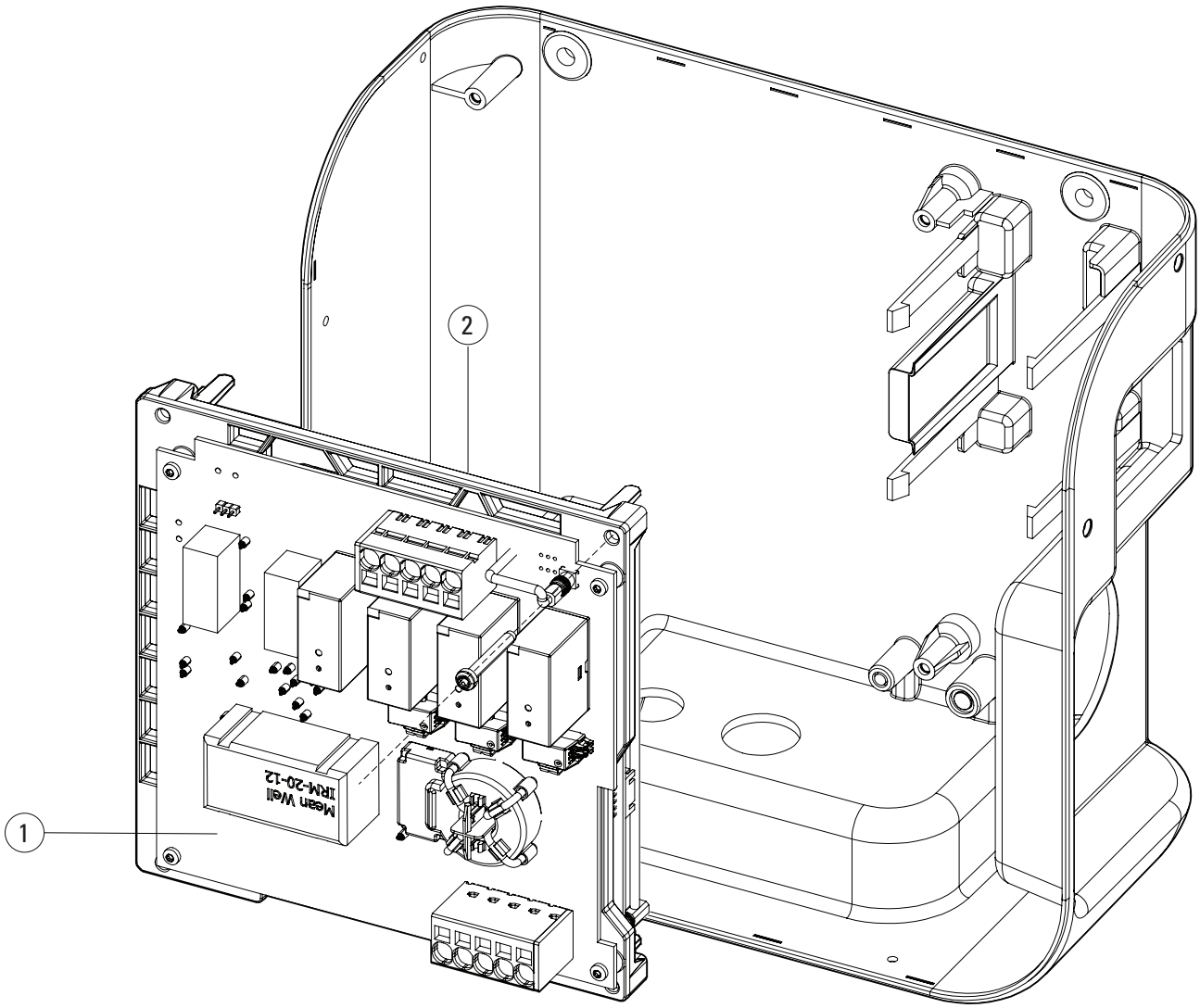

Tag	Description
1	AC platform
2	Mating connector (J9 header) on the back side of the AC platform

Figure 19. The back side of the AC platform and the location of the mating connector

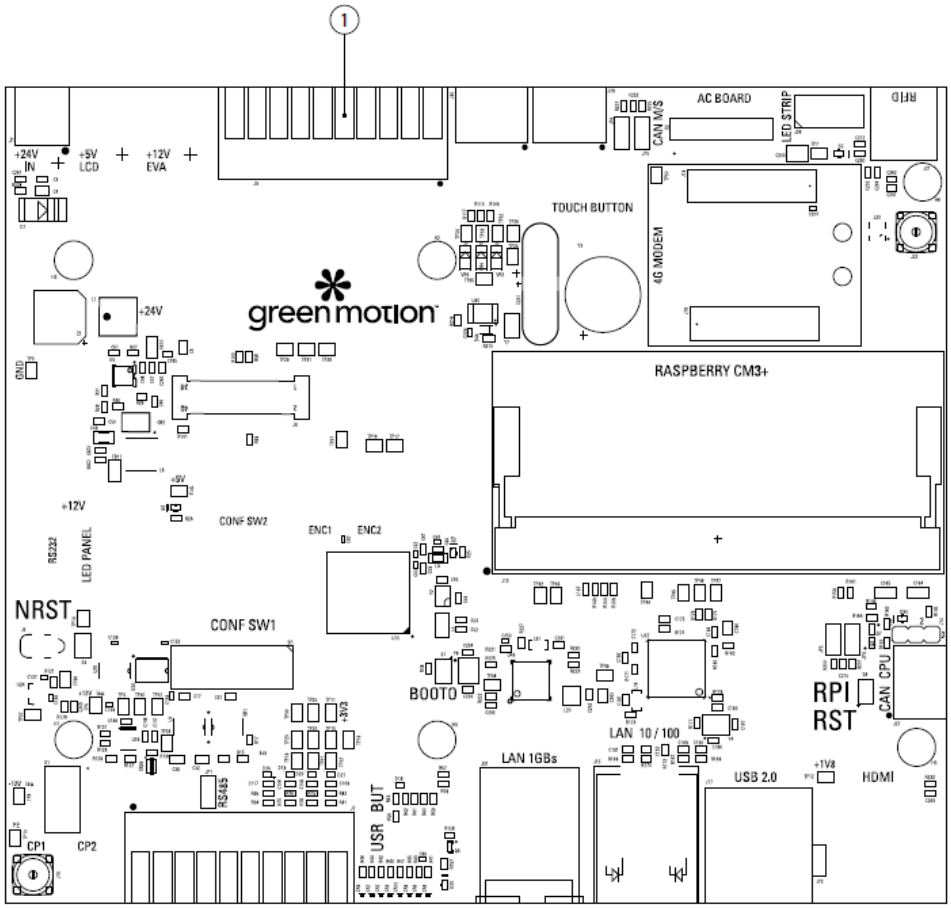

Tag	Description
①	Mating connector (J9 header)

Electronic boards should not be removed. The image is for illustration purposes only.

Make sure to wear appropriate PPE to perform the operation.

Step 4. Correctly orient the connector with edge of the PCB. Plug in the mating connector carefully.

Figure 20. Proper alignment of the mating connector

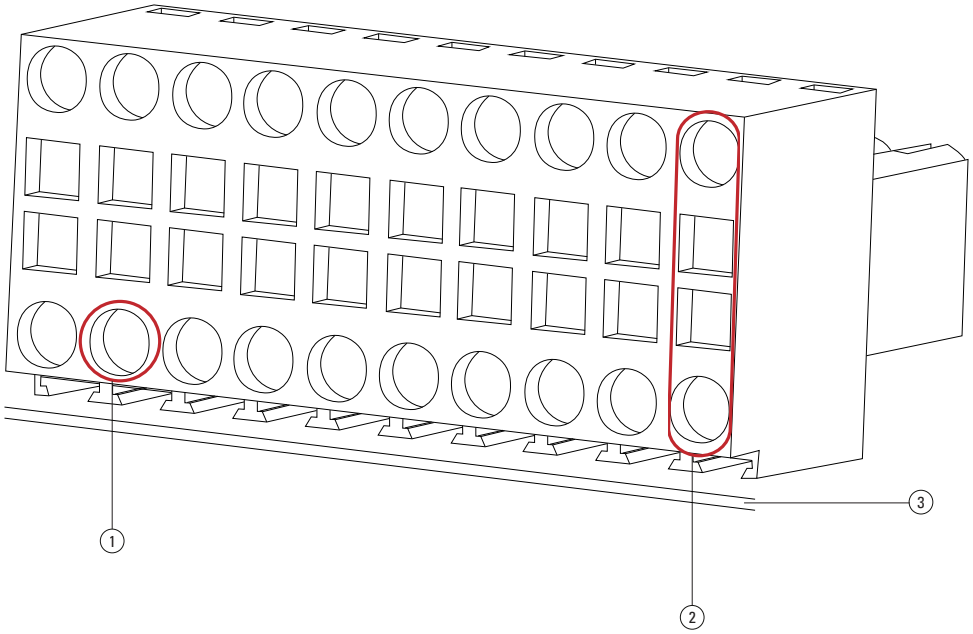

Tag	Description		
1	Pin 4	→	E
2	Pin 19, 20	→	GND (shunt trip)
3	Edge of PCB		

Take note of connector orientation with respect to the PCB edge. The device can malfunction in case of incorrect wiring.

Step 5. Connect the wires to the shunt trip by passing through the communication cable gland at the bottom of the EV charger. Carefully route the wires, making sure the wires do not touch the electronic boards.

Figure 21. Bottom view of the Green Motion Building. EV charger

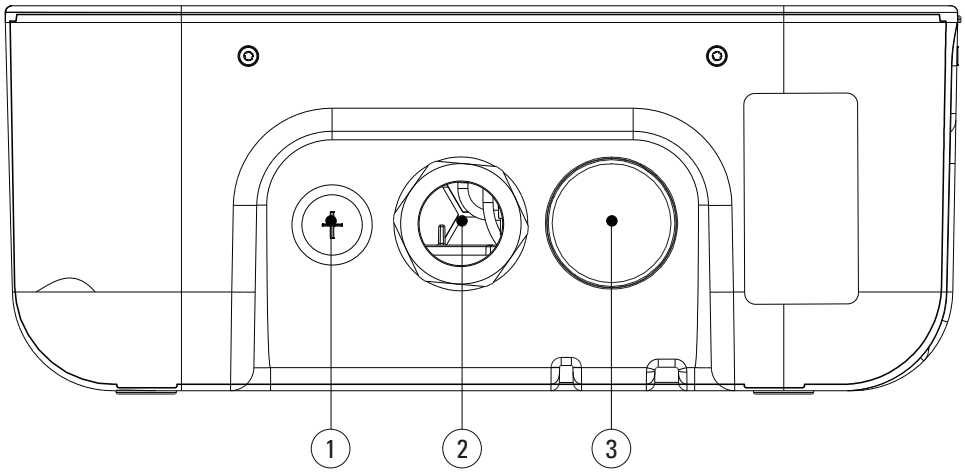

Tag	Description
1	Communication cable gland
2	Power input
3	Cable output

Step 6. Carefully reassemble the platform and close the Green Motion Building. EV charger.
If after installation of the shunt trip a contactor failure occurs in the EV charger, the EV charger enters a fault mode. The LED indicator on the front cover turns red. See Section 9.2. After a few seconds, the emergency output activates the shunt trip, switching off the circuit breakers.

6.6 Remote shut-off

For the remote shut-off of the EV charger, an external contactor can be connected according to the schematic in Figure 22.

Figure 22. Remote shut-off terminal with wiring diagram

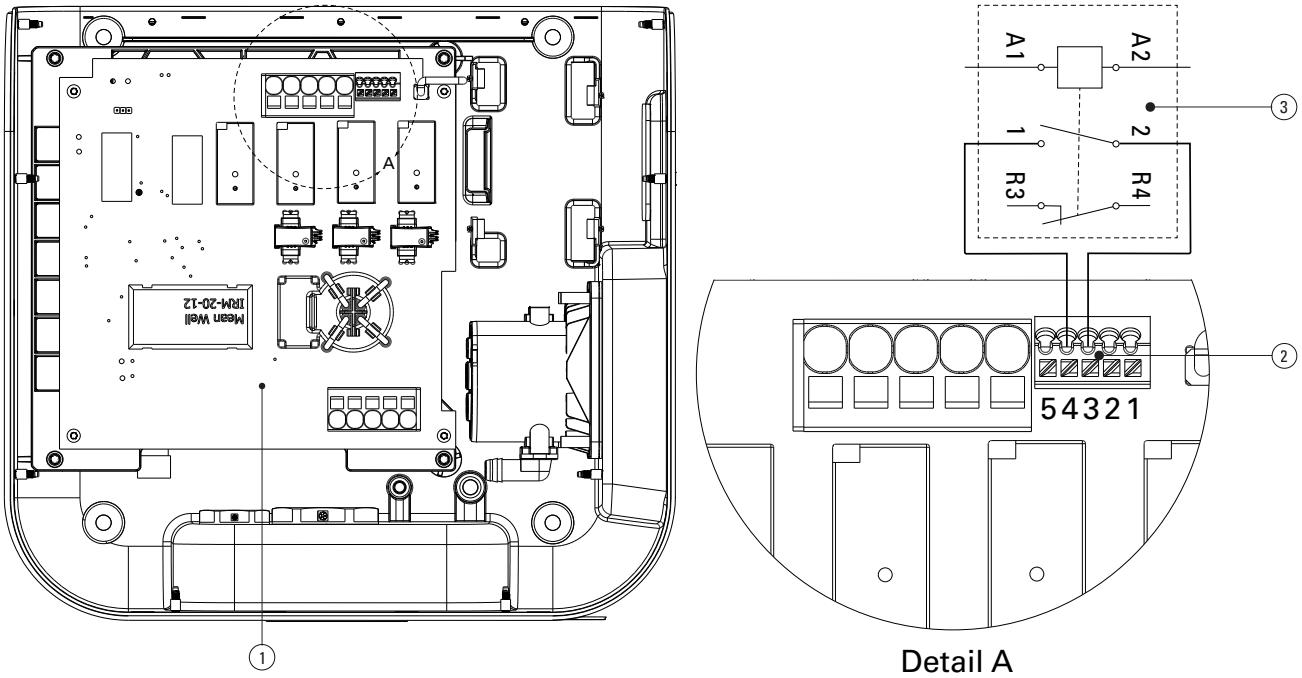

Tag	Description
1	AC platform
2	Control connector
3	External contactor

The switch should normally be in open mode. To connect the contactor to the Green Motion Building. EV charger, follow these steps:

Step 1. Open the Green Motion Building. EV charger (refer to Section 5.2).

Step 2. Locate the connector on the AC platform (refer to Figure 22).

Step 3. Connect the external contactor between **pin 4 (external contactor) and pin 3 (PE)**

Step 4. Pass the cable through the communication gland of the EV charger (refer to Figure 22)

Step 5. Carefully reassemble the platform and close the Green Motion Building. EV charger.

6.7 Ethernet connection

The ETH0 is configured as DHCP Server and ETH1 as DHCP Client by default. To connect the charger to an existing network infrastructure use the ETH1.

6.7.1 Specifications

A shielded Ethernet modular crimp connector should be used with a UL certified, stranded and shielded CAT6 Ethernet cable.

6.7.2 Wiring

The Green Motion Building EV chargers are equipped with two Ethernet ports. The ports are located on the lower edge of the PCB boards. The EV charger is provided with two Ethernet cables and cable glands to facilitate an easier connection. The Ethernet cables are equipped with a right-angle male connector on one end (to connect to the PCB platform) and a female connector on the other end.

Step 1. Open the Green Motion Building EV charger. See Section 5.2.

Step 2. Locate the two Ethernet ports on the lower edge of the PCB platform (refer to Figure 23).

Step 3. Connect the provided Ethernet cables to the PCB platform.

Figure 23. Ethernet port locations on the Control unit (PCB) inside the Green Motion Building EV charger – Front view

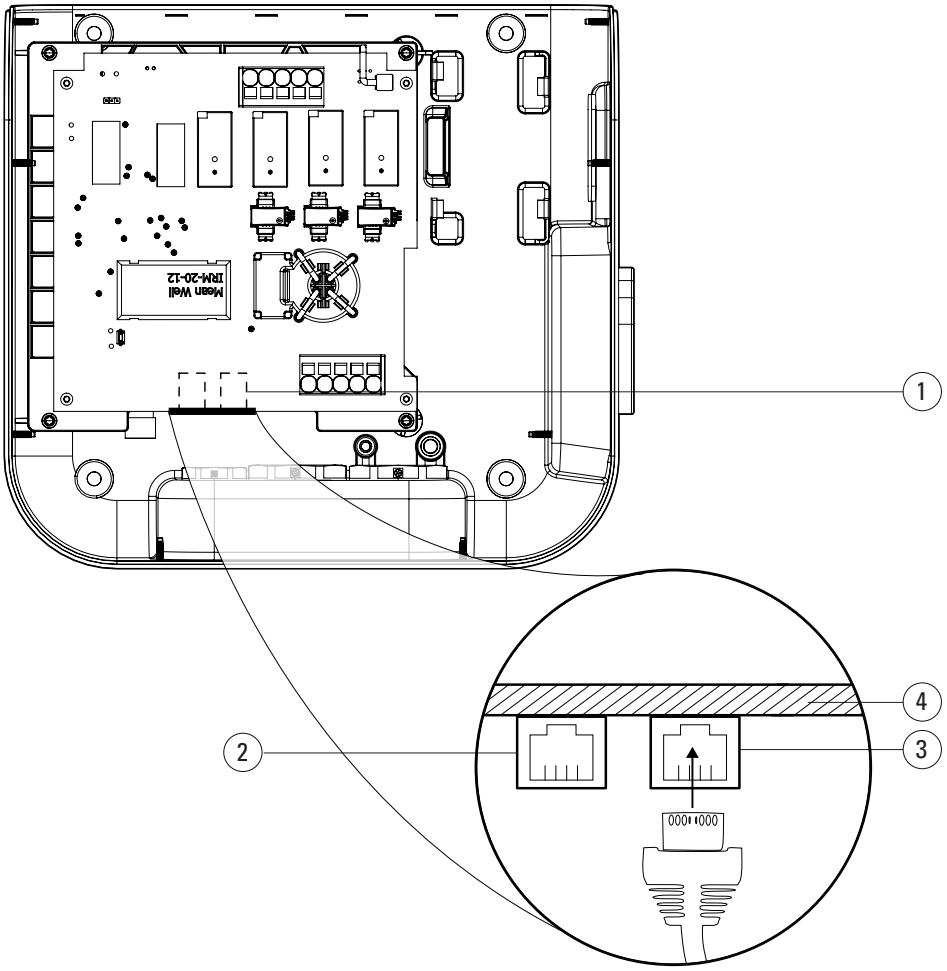

Tag	Description
1	Ethernet ports location
2	ETH0 port
3	ETH1 port
4	Edge of the PCB platform

Step 4. Use the communication cable gland to route the cable (refer to Figure 21).

Step 5. Connect the wires to the front cover, carefully reassemble the platform, and close the unit.

When using both cables, use labels to distinguish the ports: ETH0 (left port), ETH1 (right port).

6.8 4G LTE Connection

Green Motion Building EV chargers that support 4G WAN connectivity should be equipped with a 4G SIM card during installation (not provided with the unit). When selecting a SIM card for the EV charger, the specifications below should be respected.

In scenarios where Green Motion Building EV chargers are connected in a master-node network, it is strongly recommended to upgrade the firmware of the EV charger configured as the Master first, followed by upgrading the firmware of the EV chargers configured as Nodes.

6.8.1 Technical Specifications

- Network: 4G LTE
- Type: 2FF mini SIM card

Choose a service provider that is operating on a private access point name (APN) and provides an option to encrypt data communications using either a VPN or IPSec protection for 4G communication. Sim card should provide the following features:

- Universal integrated circuit card (UICC) pin support to prevent unauthorized access to network,
- Security measures against theft and SIM card cloning.

It is strongly recommended not to use SIM cards available over the counter that operate on public APNs, as those are not meant for IoT commercial products and are considered to pose a cybersecurity risk.

6.8.2 Data consumption

The amount of data transferred between an EV charger and the backend server may vary, based on the network structure. It is recommended to select an unlimited data plan or at least a data plan that takes into account the usage pattern listed below:

- The expected average monthly data traffic may reach up to 80 MB per EV charger.
- An additional annual data usage of up to 500 MB should be considered for firmware and feature updates twice a year per EV charger.

In network installations where a single EV charger is used to route the traffic for the entire network, data usage will be multiplied by the number of EV chargers in the network.

6.8.3 Installation instructions

Follow the steps below to equip the EV charger with the SIM card.

Step 1. Open the Green Motion Building EV charger. See Section 5.2

Step 2. Locate the sim card slot on the upper left corner of the PCBA platform.

Step 3. Insert the SIM card. Ensure it is not loosely fitted.

Figure 24. SIM card holder location

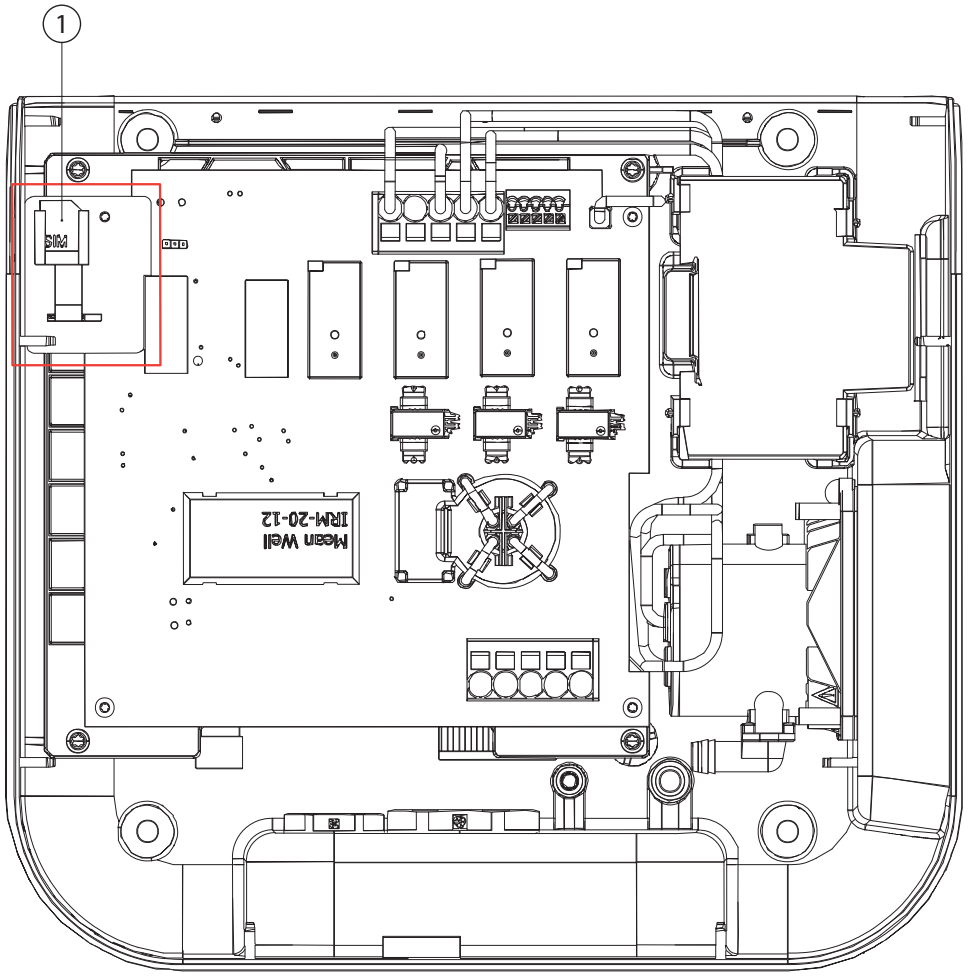

Tag	Description
1	SIM card in the SIM card holder

Step 4. Connect the wires to the front cover, carefully reassemble the platform, and close the unit.

6.9 Connection to an external energy meter

Green Motion Building EV chargers can be connected to building energy meters to enable dynamic load balancing. The EV charger communicates with an energy meter over the Modbus TCP/IP protocol. The following energy meters are pre-configured for use with Green Motion Building EV chargers and are therefore recommended:

Table 13. Recommended energy meters

Manufacturer	Model
Janitza	• UMG 96 RM • UMG604-E
Carlo Gavazzi	• EM24DINAV53XE1X • EM24DINAV23XE1X (65 A)
Eastron	SDM630-TCP (65A) Rail DIN

The energy meter must be directly connected to the Master EV charger or visible on the EV chargers local network. Refer to section 8 for more details.



Energy meters should be configured before use based on the installation site and network settings. Check the manufacturer's instructions for detailed configuration steps.

Verify the meter readings and the connection to the energy meter independently before connecting to the EV charger.

The application note to assist in configuring the energy meters mentioned in Table 14 is also available on the product page.

7. Load and phase balancing

Intelligence lies in enabling efficient use of available energy. Load balancing feature distributes the available capacity proportionally over all active charging stations. In doing so optimal charging is provided to all electric vehicle at a site, within the limit of charger and site capacity. Balancing the power across three phase help deliver a consistent charging speed. Green Motion Building chargers can be connected in a network enabling load and phase balancing features.

The EV chargers participating in the network will have to be configured either as a Master or as a Node of the network.

Master EV charger: An EV charger configured as Master exerts total control over and initiates commands to the other EV chargers in the network, i.e., the Nodes. Any Green Motion Building EV charger can be selected as the Master. If communication with the backend is done via 4G, the Master will have to be equipped with the 4G SIM card.

Node EV charger: An EV charger configured as Node responds to the commands of the Master EV charger in the network. The number of nodes is limited as a function of your network configuration, please refer Chapter 8 for more details.

7.1 Definitions

Eaton load balancing algorithm: The Eaton load balancing algorithm allows a continuously optimized current distribution to the EV chargers based on:

- Maximum available current
- Number of vehicles connected
- Maximum current capacity per vehicle
- EV charger priority
- Maximum current capacity of the EV charger

The continuous optimization means that for each event (e.g., initiating a charging session)) or at periodic times, the algorithm recalculates the optimal output current of each EV charger and instructs the EV chargers to limit the output current to this value. See Figure 25.

Figure 25. Load balancing algorithm outputs

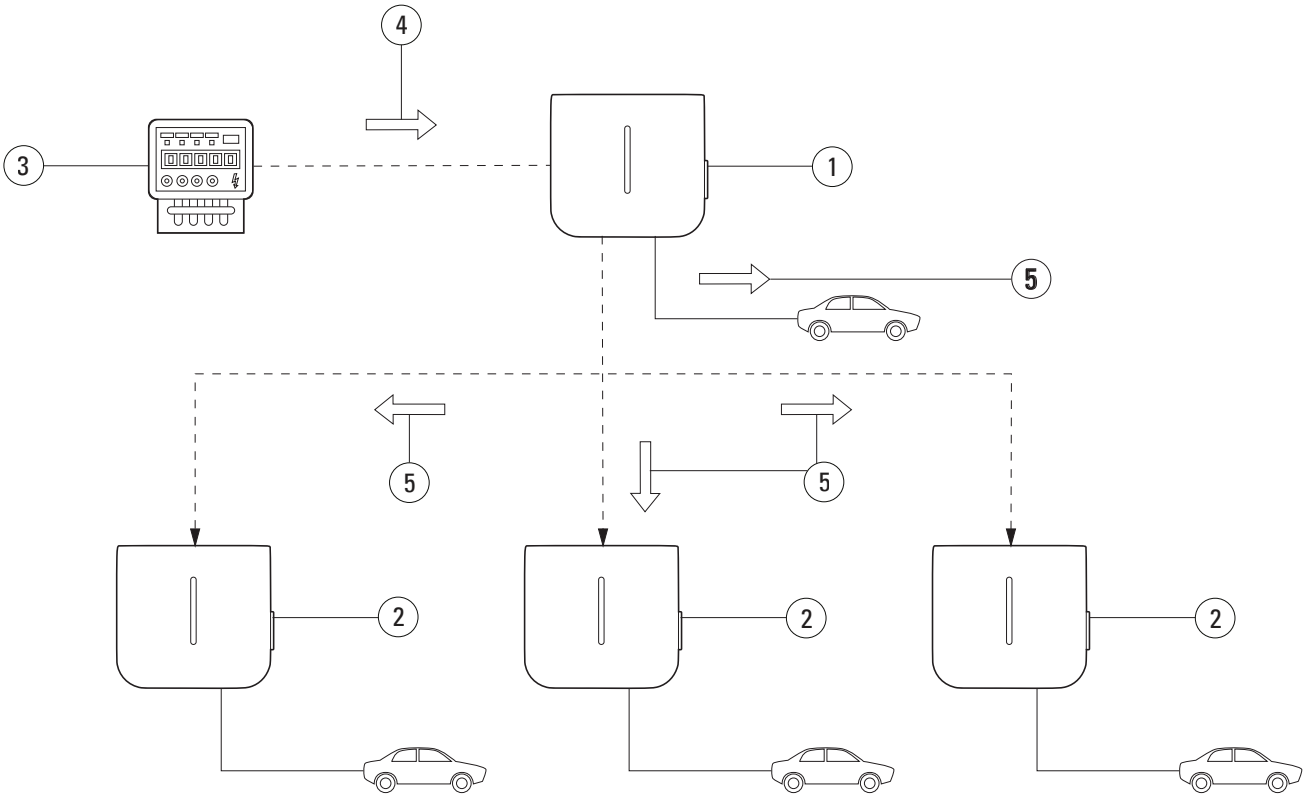

Tag	Description
1	Green Motion Building EV charger Master
2	Green Motion Building EV charger Node
3	Energy meter
4	Maximum available current for charging (= Maximum current capacity of building – Energy meter reading)
5	Optimal output currents (depending on the Eaton load balancing algorithm)

Static load balancing: The maximum available current is divided over the EV chargers according to the Eaton load balancing algorithm. The maximum available current is a FIXED VALUE depending on the electrical installation.

Maximum available current (static) = Maximum current (building) - Maximum other loads (building) - Margin

Dynamic load balancing: The maximum available current is divided over the EV chargers according to the Eaton load balancing algorithm. The maximum available current is a DYNAMIC VALUE updated according to the building consumption monitored in real-time with an energy meter (EM).

Maximum available current (dynamic) = Maximum current (building) - other loads (monitored by energy meter) - Margin

Phase balancing: Limits current differences between phases. Large deviations in load per phase can cause grid instability and problems with the powered devices.

7.2 Load balancing

7.2.1 Load balancing parameters

The relevant parameters for understanding load balancing by the Eaton load balancing algorithm are described in the table below.

Table 14. Load balancing parameters

Parameter	Description
Maximum current for the charging site [A]	The maximum current [A] the local electrical infrastructure can supply to the EV chargers. This value ensures that the combined load of the EV chargers never exceeds the maximum current dedicated to the EV charging electrical infrastructure. This value is fixed and is used by the algorithm for both static and dynamic load balancing.
Maximum current for the building[A]	The maximum current [A] capacity of the local electrical infrastructure including, but not limited to, the EV charging electrical infrastructure. This value is fixed and is used by the algorithm for dynamic load balancing.
Prioritize this charger	The EV charger set as priority will be provided with the maximum available current for faster charging. Then the remaining current is shared between the EV chargers without priority.

7.2.2 Static load balancing

For static load balancing the Eaton load balancing algorithm uses the parameter Maximum current for the charging site as the total available current for EV chargers. The algorithm then divides this current over the EV chargers, considering:

- Number of cars connected
- Maximum current capacity per car
- EV charger priority

The parameter Prioritize this charger determines the importance the Eaton load balancing algorithm attaches to each EV charger. This parameter can differ from one EV charger to the next.

Example

Three EV chargers will be installed in a building with a maximum current capacity of 100 A. The maximum load of all other installed equipment is 60 A. The electrical infrastructure supplying the EV chargers can supply 50 A. There is no energy meter present. EV charger 1 is configured as Master. EV charger 2 and 3 are configured as nodes. EV charger 1 is also reserved for an essential service vehicle that should always be charged as fast as possible. The parameters for the three EV chargers in this case should be as follows:

Table 15. Example of static load balancing

	EV charger 1	EV charger 2	EV charger 3
Dynamic load balancing enabled	No	N/A	N/A
Mode	Master	Node	Node
Phase balancing limit	See Section 7.3	N/A	N/A
Energy meter enabled	No	N/A	N/A
Maximum current for the charging site[6]	40 A	N/A	N/A
Prioritize this charger	Yes	No	No

[6] The electrical infrastructure supplying the EV chargers can supply 50 A, however the maximum load of all other installed equipment is 60 A. Maximum current capacity – maximum load of all other installed equipment = Maximum available current for EV charging. 100 A – 60 A = 40 A.

Example:

In the case below, the grid power line can go up to 80A and we would like to keep 20A for other consumption. In this case we set the limit to 60A.

Figure 26. Static load balancing example

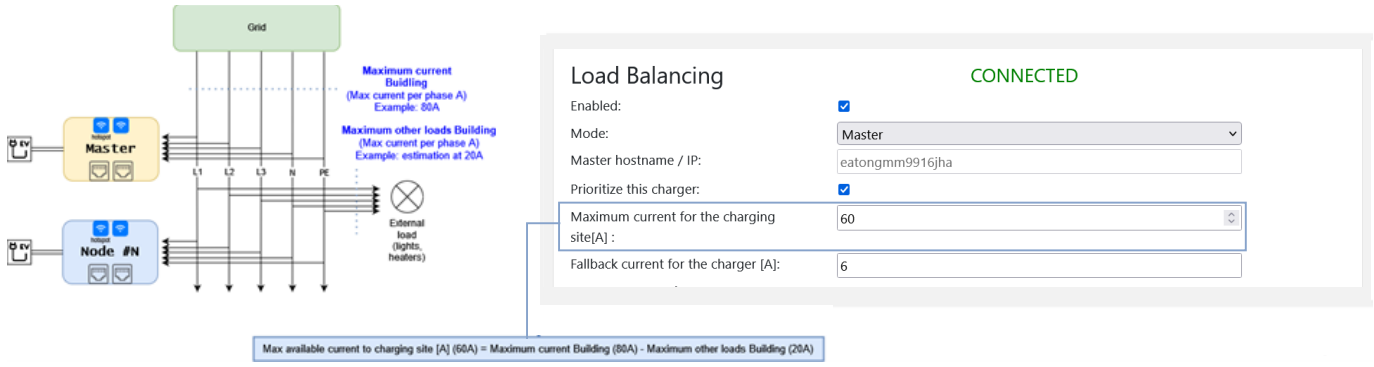

7.2.3 Dynamic load balancing

Dynamic load balancing allows unused energy in the building to be allocated to EV chargers without exceeding the capacity of the EV charging infrastructure.

For dynamic load balancing the Eaton load balancing algorithm uses the two parameters "Maximum current for the charging site", "Maximum current for the building" and the input from the energy meter to calculate the total available current for EV chargers.

If the total available current for EV chargers is LOWER than the parameter Maximum current for the charging site, the total available current for EV chargers is calculated as follows:

IF:

[Maximum current capacity $_{(building)}$ - Energy meter reading] < Maximum available current for EV charging

THEN:

Total available current $_{(dynamic)}$ = Maximum current capacity $_{(building)}$ - Energy meter reading

However, IF this calculated total available current is HIGHER than the parameter Maximum current for the charging site, the latter value is used instead:

IF:

[Maximum current capacity $_{(building)}$ - Energy meter reading] > Maximum available current for EV charging

THEN:

Total available current $_{(dynamic)}$ = Maximum available current for EV charging

The algorithm then divides the total available current over the EV chargers, considering:

- Number of cars connected
- Maximum current capacity per car
- Charging stations' priorities.

The parameter "Prioritize this charger" determines the importance the Eaton load balancing algorithm attaches to each EV charger. This parameter can differ from one EV charger to the next.

Example

Three EV chargers will be installed in a building with a maximum current capacity of 100 A. The maximum load of all other installed equipment is 60 A. The electrical infrastructure supplying the EV chargers can provide 50 A. There is an energy meter present. EV charger 1 is configured as Master. EV charger 2 and 3 are configured as nodes. EV charger 1 is also reserved for an essential service vehicle that should always be charged as fast as possible. The parameters for the three EV chargers in this case should be configured according to Table 17.

Table 16. Example of dynamic load balancing

	EV charger 1	EV charger 2	EV charger 3
Dynamic load balancing enabled	Yes	N/A	N/A
Mode	Master	Node	Node
Phase balancing limit	See Section 7.3	N/A	N/A
Energy meter enabled	Yes	N/A	N/A
Maximum current for the charging site[7]	50 A	N/A	N/A
Maximum current for the building	100 A	N/A	N/A
Prioritize this charger	Yes	No	No

[7] The electrical infrastructure supplying the EV chargers can deliver 50 A.

For an energy meter reading of 80 A

The algorithm, in this case, will subtract the energy meter reading from the "Maximum current for the building": 100 A – 80 A = 20 A. This value is LOWER than the "Maximum current for the charging site", therefore this value (20 A) is used as the total available current for EV charging. EV charger 1 has a priority over other chargers, means that most, if not all, of the current capacity will be used by EV charger 1.

For an energy meter reading of 20 A

The algorithm, in this case, will subtract the energy meter reading from the "Maximum current for the building": 100 A – 20 A = 80 A. This value is HIGHER than the "Maximum current for the charging site", therefore the parameter Maximum available current for EV charging (50 A) is used as the total available current for EV charging. EV charger 1 has priority, meaning that it will charge the fastest, while EV chargers 2 and 3 will share the remainder of the total available current capacity.



In case there is no sufficient current available to charge the vehicle, the EV charger will change the status of the charging session to "Suspended." The LED strip on the front of the EV charger will indicate the status with a pulsating blue light. Once enough current is available for the charging session to be resumed, the EV charger will revert to the "Charging" mode. The LED strip on the front of the EV charger will indicate the status with a chasing blue light.

Example

The installation can go up to 80A, in the case below even if we have external load the energy meter will detect them, so we don't have to worry about them. We can set 'Available max current to charging site and Maximum current for the building at the same value 80A.

Figure 27. Dynamic load balancing example

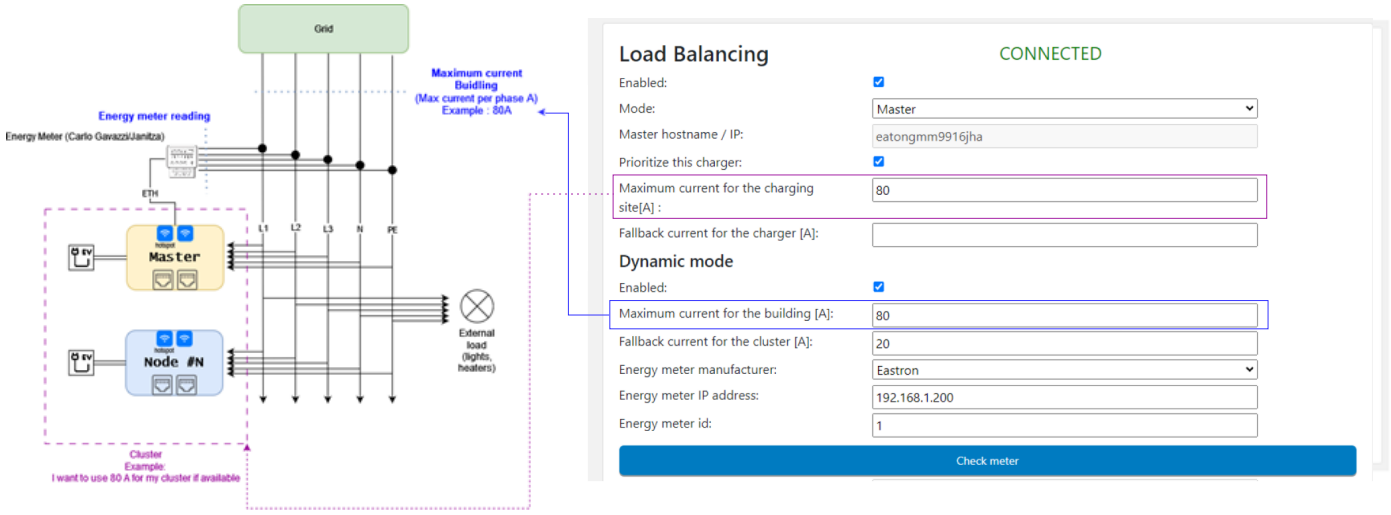

7.2.4 Networking EV chargers

Green Motion Building EV chargers can be connected to form a network. Refer to section 8.4 for the available networking options. Before creating the network, complete the installation and wiring of all EV chargers participating in the network. EV chargers should then be configured according to location and network parameters. The charger that acts as the network Master should be configured first, followed by the EV chargers configured as nodes. An energy meter should be connected to the Master EV charger if dynamic load balancing is required.

In case of communication loss between the Master EV charger and the energy meter, the load balancing algorithm will use the value of “Fallback current for the cluster [A]” as the available charging current budget for distribution.

In case of temporary communication loss between the Master and a node, the node EV charger will retry to establish communication with the Master and continue to charge the vehicle using the last value received for 30 seconds. If the node is not able to recover the communication with the Master, it will adapt its charge to the ‘Fallback current for the charger’ value while it is still not connected to the Master. The charging session will be suspended if the ‘Fallbackcurrent for the charger’ value is lower than the minimum charging value defined in the charger.

When a network of Green Motion Building EV chargers is in online mode, in case of temporary communication loss between the Master and the backend each node will try to reconnect to backend. If the Master is unable to recover the communication with the backend for 30 seconds, all the nodes will adapt their chargers for the ‘Fallback current for the charger’ value.

When a network of Green Motion Building EV chargers is created, the Master and other nodes use self- signed certificates generated by the Master to form a trusted network. In case the Master EV charger is not operational and needs to be replaced, the network must be reconfigured. Reconfiguration of the network requires all Nodes in the network to undergo a reconfiguration with the hostname of the new Master. In case of offline mode, a new commissioning pairing is required.

7.3 Phase balancing

For grid stability, the difference in current between phases should be limited as large differences decrease the power quality.

In EV charging, the phase imbalance is created when there is simultaneous three-phase charging, two-phase charging, and one-phase charging. Most cars that charge in one phase use L1, hence increasing the difference in the current of L1 and the currents of the other phases.

To ensure grid stability, it is good practice to alternate the phase connections during installation to have a robust and optimized system.

On top of that, the Green Motion Building EV charger is equipped with a phase balancing algorithm that allows for a continuous monitoring and balancing of the phase current, always ensuring grid stability.

Alternating the phase connections

The schematics in Figure 28 explain how to wire multiple Green Motion Building EV chargers.

Step 1. Connect the wires of EV charger 1 in the numerical order of phases (L1 on terminal L1, L2 on terminal L2 and L3 on terminal L3).

Step 2. Connect the wires of EV charger 2 with the phases alternated one way (L2 on terminal L1, L3 on terminal L2 and L1 on terminal L3)

Step 3. Connect the wires of EV charger 3 with the phases alternated the other way (L3 on terminal L1, L1 on terminal L2 and L2 on terminal L3).

Step 4. Connect the wires of EV charger 4 in the numerical order of phases (L1 on terminal L1, L2 on terminal L2 and L3 on terminal L3), in the same way as EV charger 1.

Step 5. Repeat the cycle by connecting the wires of EV charger 5 like EV charger 2 and EV charger 6 like EV charger 3.

The cycle should be repeated for all Green Motion Building EV chargers.

Figure 28. How to wire multiple Green Motion Building EV chargers

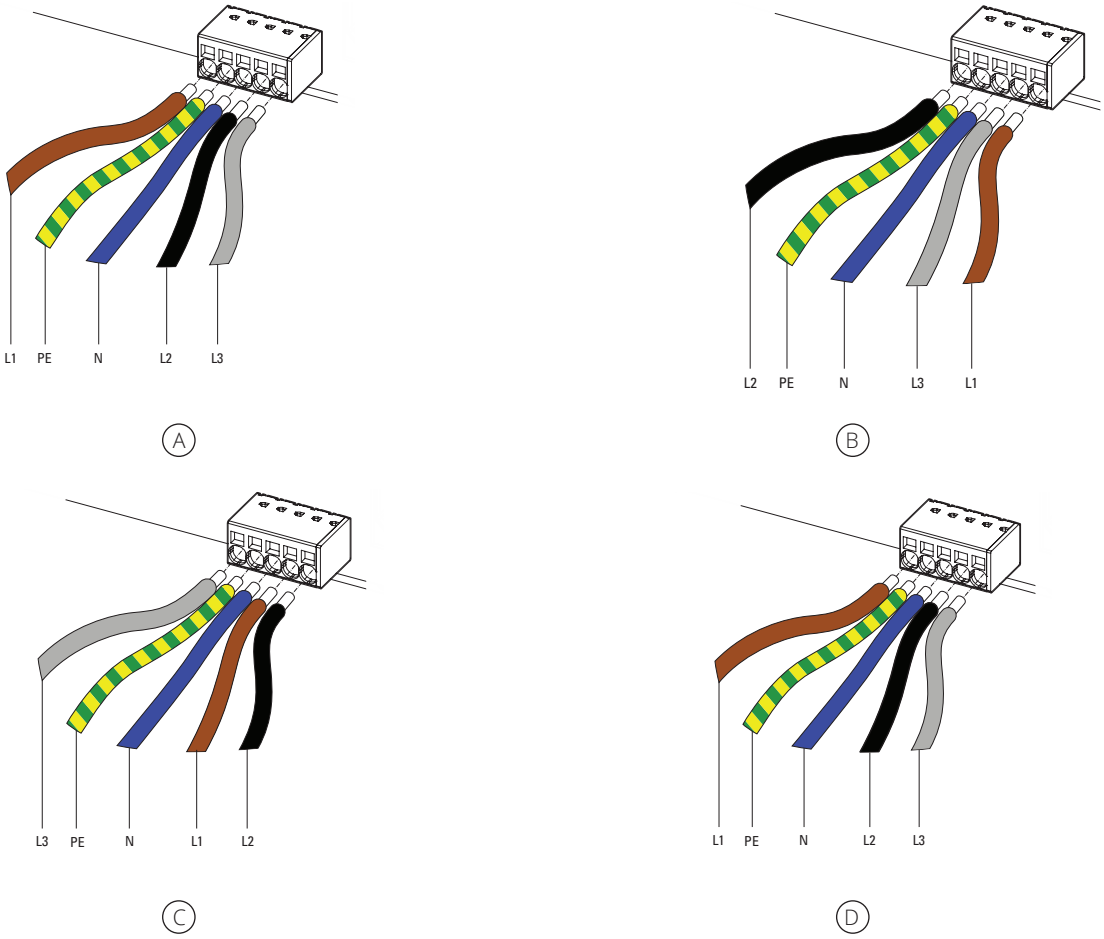

Tag	Description
A	EV charger 1: Standard wiring of phases
B	EV charger 2: Alternate phases
C	EV charger 3: Alternate phases again
D	EV charger 4: Back to standard wiring of phases

8 Device setup and network configuration

The Green Motion Building EV charger should be configured based on the installation site parameters and networking options along with expected use case options. The EV charger configuration parameters can be divided into two sections: device settings and network interface settings.

The EV charger offers multiple networking options:

- To connect to the internet (online CPO software or Eaton Charging Network Manager) via:
  - Ethernet,
  - Wi-Fi,
  - LTE 4G (4G version).
- To connect to an external energy meter via the Modbus TCP interface,
- To create a network with other Green Motion Building EV chargers to enable load balancing.

8.1 Configuration page access

The Green Motion Building EV charger can be configured via the web portal using the configuration page. The configuration page can be accessed using a laptop, tablet, or smartphone connected to the EV charger via Ethernet or Wi-Fi Hotspot.



The web portal is supported by Chrome, Opera, and Firefox web browsers. It is not supported by the Safari browser.

Table 17. Accessing the configuration page

	Description	Remarks
Left Ethernet Port	At address: 192.168.51.1	Recommended access
Right Ethernet Port	Using the CP hostname or IP assigned by the network	
Wi-Fi Hotspot	At address: 192.168.53.1	Requires connecting the hotspot ssid.

8.1.1 Connection via Ethernet

To connect to the EV charger via Ethernet, follow these steps:

Step 1. Connect the RJ45 cable to port ETH0 (left port). Refer to Section 6.7 for more details.

Step 2. Turn the EV charger OFF and then ON using the circuit breaker. Wait for the LED indicator on the EV charger to turn green.

Step 3. Using a web browser, navigate to the address: http://192.168.51.1



You may see a warning message before you get to the configuration page. You can safely ignore this warning and proceed further.

If the fields are blank, try clearing the browser cache.



When connecting the EV charger via Ethernet, the configuration session is active for 30 minutes. After 30 minutes, the EV charger will need to be rebooted and reconnected to resume the configuration.

8.1.2 Connection via Wi-Fi hotspot

To connect to the EV charger via Wi-Fi hotspot, follow these steps:

Step 1. Turn the EV charger OFF and ON using the circuit breaker. Wait for the LED indicator on the EV charger to turn green.

Step 2. Enable Wi-Fi on your phone, computer, or tablet, and search for available SSIDs.

Step 3. The EV charger will appear as GM_XXXXXX, where XXXXXX is the last six digits of the serial number.

Step 4. Each charger has a unique Wi-Fi hotspot password. The password is provided on the first page of quick start guide that is included in the package. Password is provided in text and QR code format. The password should be stored safely for future usage.

Step 5. Use the provided password to log in.

Step 6. Go to the address: http://192.168.53.1

Figure 29. Connecting the EV charger via the Wi-Fi hotspot

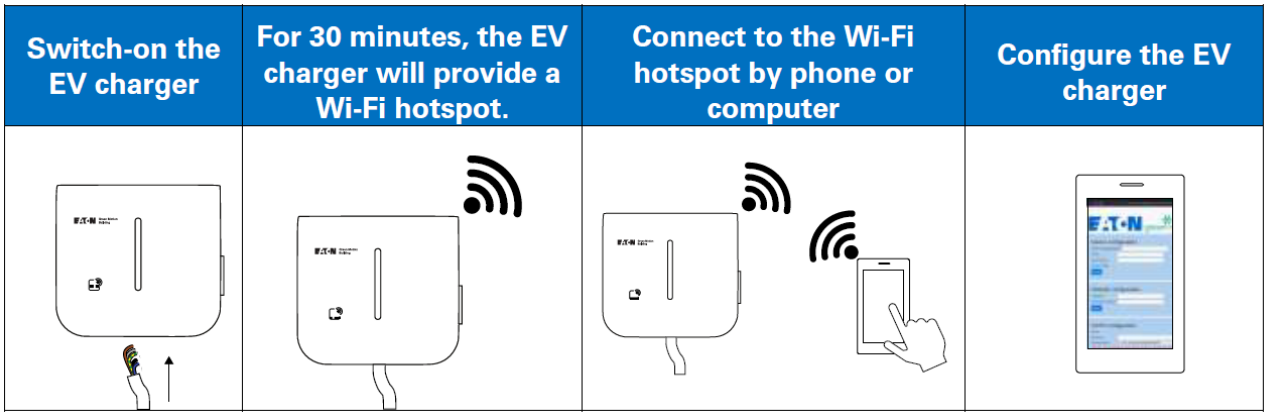

You may see a warning message before you get to the configuration page. You can safely ignore this warning and proceed further.

If the fields are empty, try clearing your browser cache or verifying your Wi-Fi connection.

When connecting the EV charger via a Wi-Fi access point, the configuration session is active for 30 minutes. After 30 minutes, the EV charger will need to be rebooted and reconnected to resume the configuration.

8.2 Configuration page

Accessing to the configuration page requires a username and password. By default, the username and password are both set to admin.

Username	admin
Password	admin

Four languages are available for the display of this page, French, English, German and Italian. Please select yours on the selector button named “Language”.

Figure 30. Configuration Page – Login



Change the password and/or username after the first login. Please refer to Section User settings to modify/set your login identifier.

If the user forgets their login identifiers there are two ways to recover the access:

- Perform a factory reset of the EV charger (See Section 9.4 Factory Reset)
- Contact your CPO software provider. If you are using Eaton Charging network manager, please contact bgtechsupport@eaton.com.

Figure 31. Configuration page (quick view)

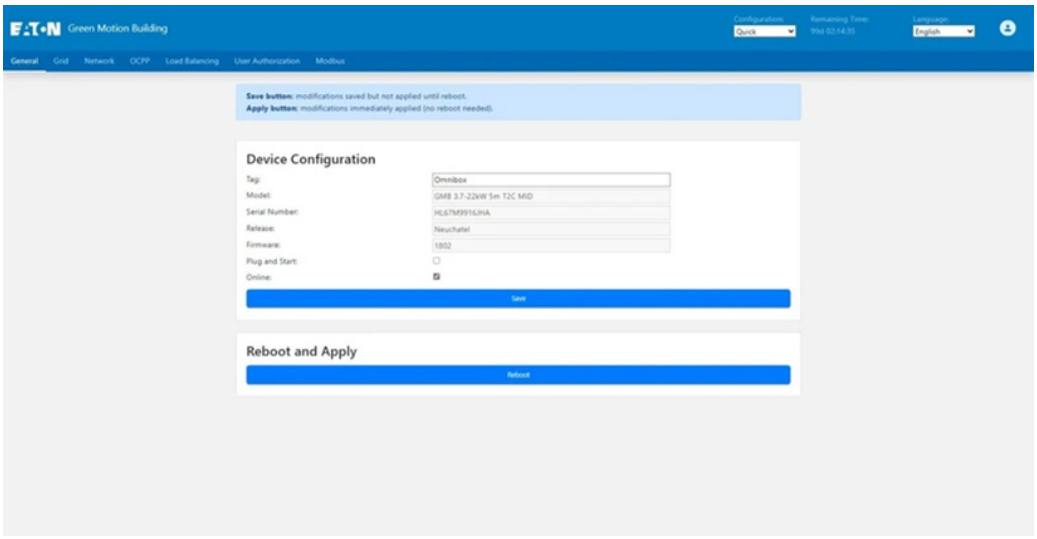

When connecting the EV charger, configuration session is active for 30 minutes. After 30 minutes, the EV charger must be restarted for the configuration session to be resumed.

The “Remaining Time” field at the top of the page keeps track of the time remaining to complete the configuration.

There are two views of configuration:

- **Quick view:** Gives access to basic configuration of the EV charger network
- **Advanced view:** Gives access to full configuration and two extra sections, Maintenance and Reporting

Figure 32. Configuration Page Header – Quick/Advanced view

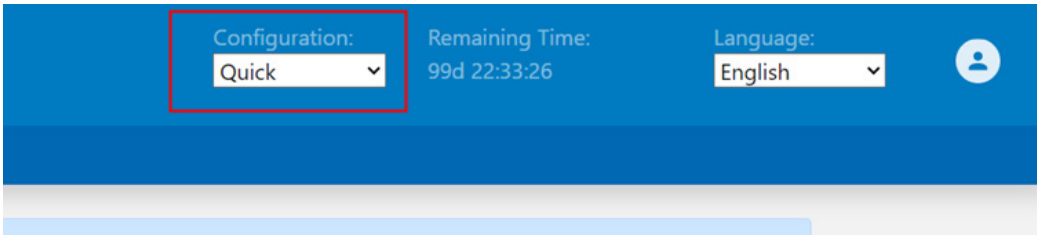

8.2.1 User settings

This section is to modify/set the login identifiers.

Figure 34. User Settings

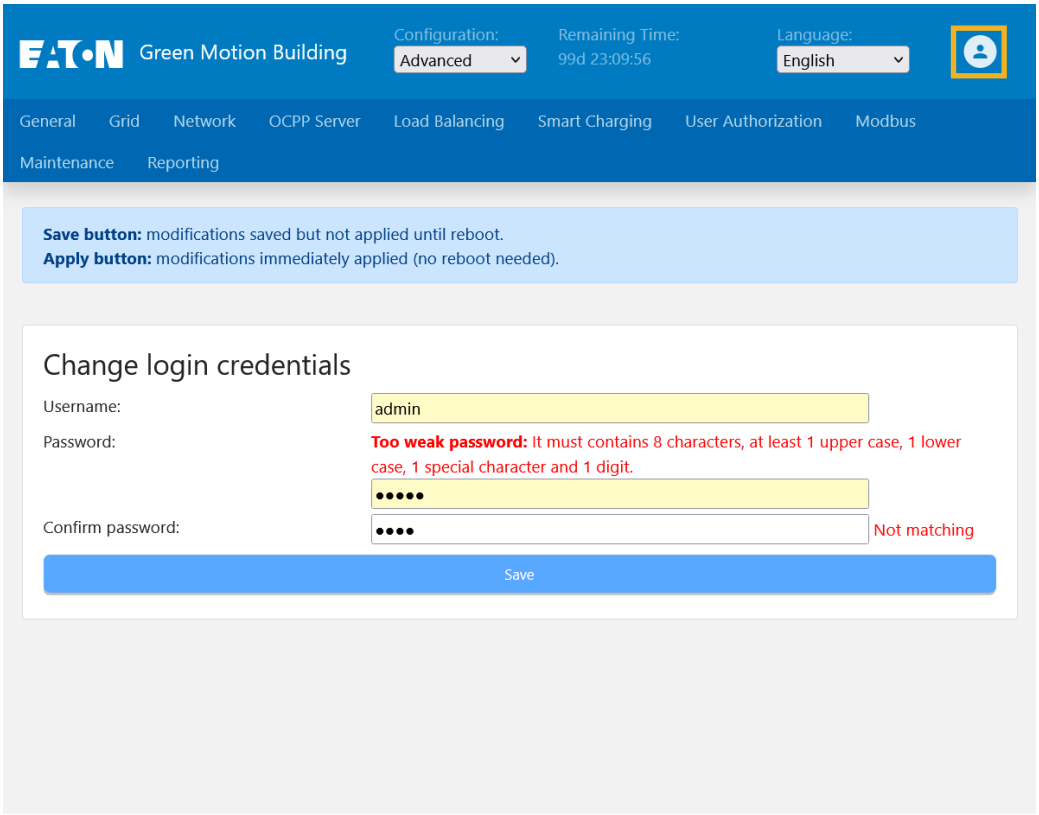

Table 18. Login credentials requirements

	Description
Username	Minimum 3 characters, special characters accepted.
Password	The password must contain 8 characters, at least 1 upper case, 1 lower case, 1 special character and 1 numerical.

Once the login identifiers have been saved you cannot use anymore the precedent one.

Please be careful when changing username/password and be sure to be able to remember those. The default password can be recovered through an OCPP key (contact your software provider) or a factory reset.

8.2.2 Reboot and Apply Settings

All the tabs of the configuration page contain the buttons for Reboot or Restart App.

It is recommended to save and apply the settings as soon as the configuration section is completed. If the configuration does not have an 'Apply' button, a reboot is required for completing the process and for the changes to take effect.

Alternatively, you can switch the EV charger OFF and ON after changing a configuration without pressing the 'Apply' button.

Figure 33. Configuration page footer – reboot and apply

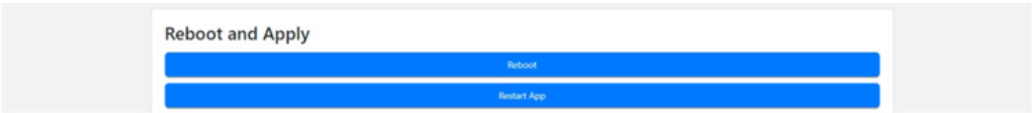

8.3 Device settings

8.3.1 General

This section contains the configuration related to the identification of the charger.

Enter an appropriate name tag for the device in the “Tag” text box. A naming convention may include EV charger location, priority, and other information that helps identify a particular unit.

In certain scenarios, you may want to allow users to charge their electric vehicles without requiring any authentication. This is particularly useful for private parking spaces, residential garages, or other controlled environments where user authentication is unnecessary. By enabling the free mode, the EV charger will automatically start and end charging sessions as soon as an EV is connected, without relying on RFID authentication.

To configure the charging station for free mode:

1. Go to the line Authorisation to Charge
2. Select "Free (Plug and Start)"

Note that by default the EV charger is expecting authentication.

Figure 35. General

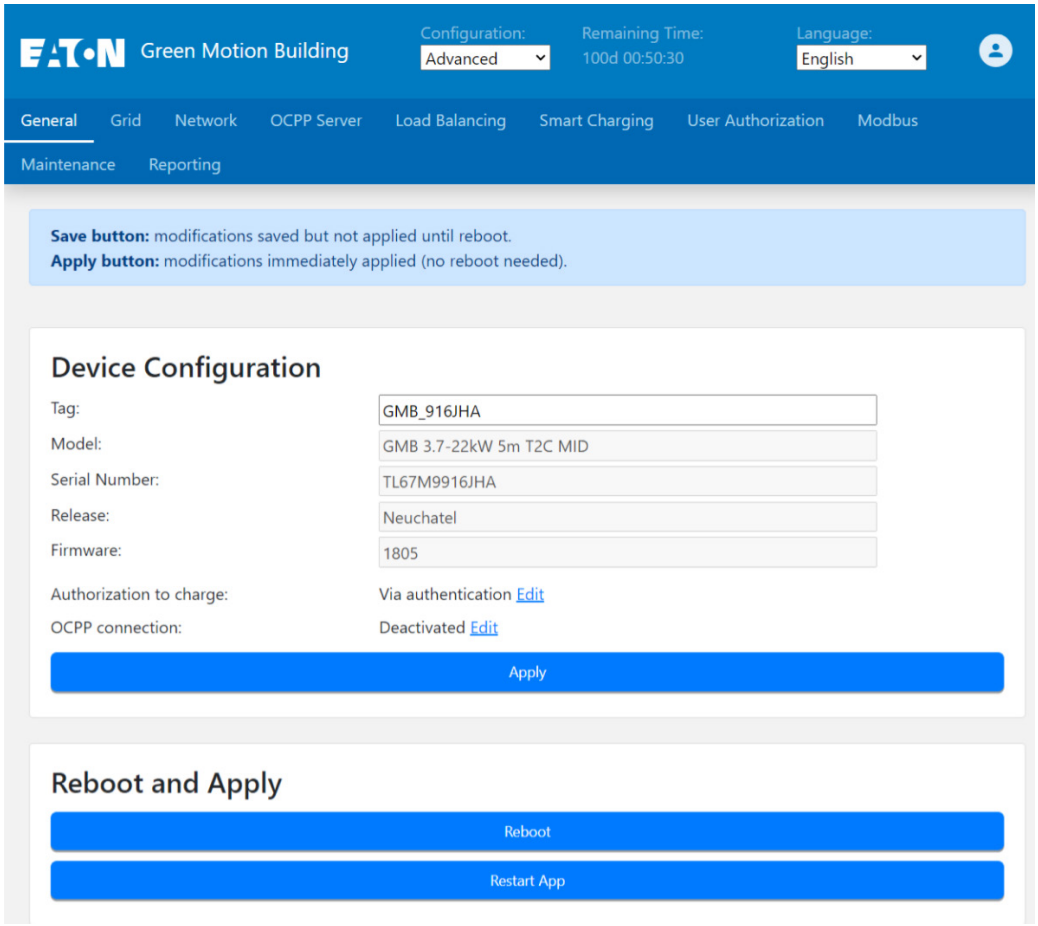

Table 19. Description of the fields in the tab General

	Description
Tag	"Label" of the charging point. Default is GMB_ + last 6 digits of the serial number.
Model	Model of the charging station. For example: GMB 3.7-22kW T2S - GMB: Green Motion Eaton Building - 3.7-22kW: range of power - T2S: type of plug
Serial Number	"Serial number" of the charging point.
Release	Name of the firmware release.
Firmware	Version of the firmware release.
Authorization to charge	It defines how the charging station will authorize the charge. - Free (Plug and Start): No RFID badge or authentication is required - Via authentication: the charger needs to identify the user by different manners (RFID badge, Mobile app connected to CPO Software) The link "Edit" is a direct access to modify this option.
OCPP connection	It defines how the charging station will behave. - Activated: monitored and controlled by a Charging Management System, requires an internet connection. - Deactivated: the charger does not need an internet access.

8.3.2 Grid settings

This section contains the configuration related to the charging settings.

Figure 36. Configuration page – grid settings

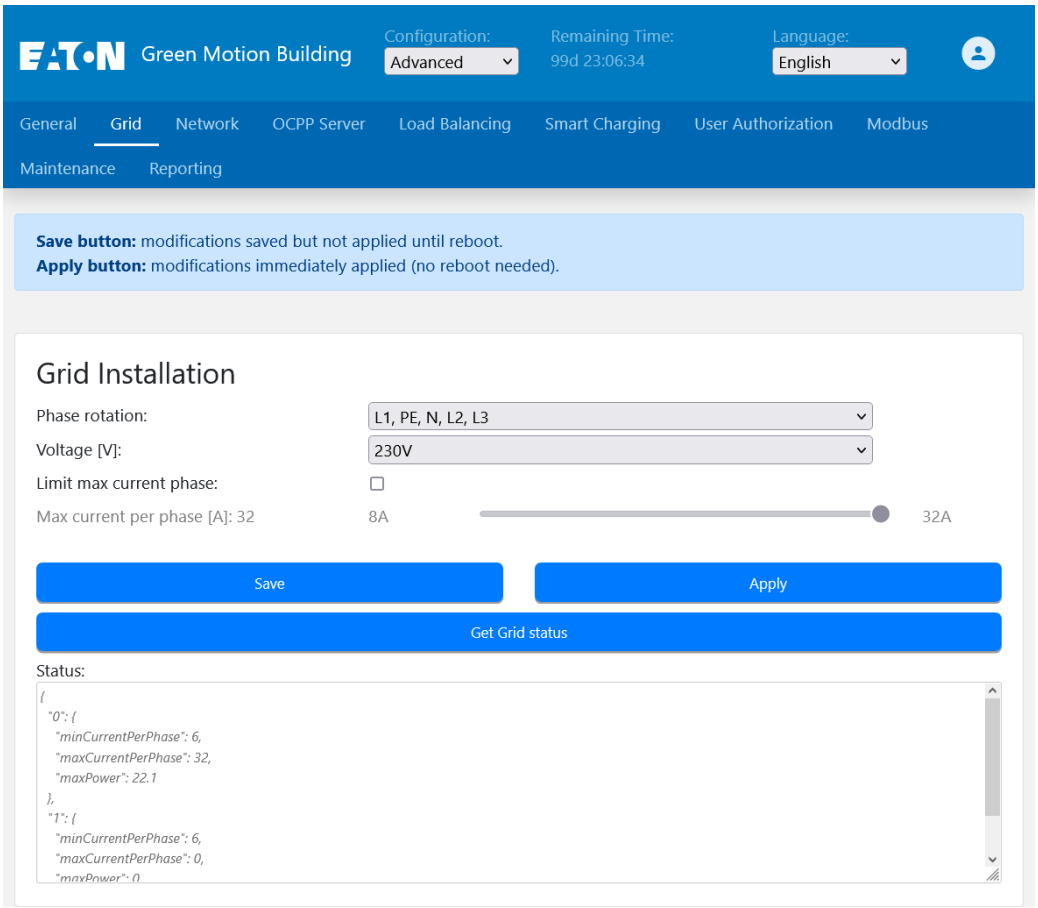

8.3.2.1 Charging current limitation

The maximum charging current provided by the EV charger can be reduced by enabling the current limiting feature. Once enabled, the current limit can be adjusted using the slider.

Figure 37. Grid configuration section

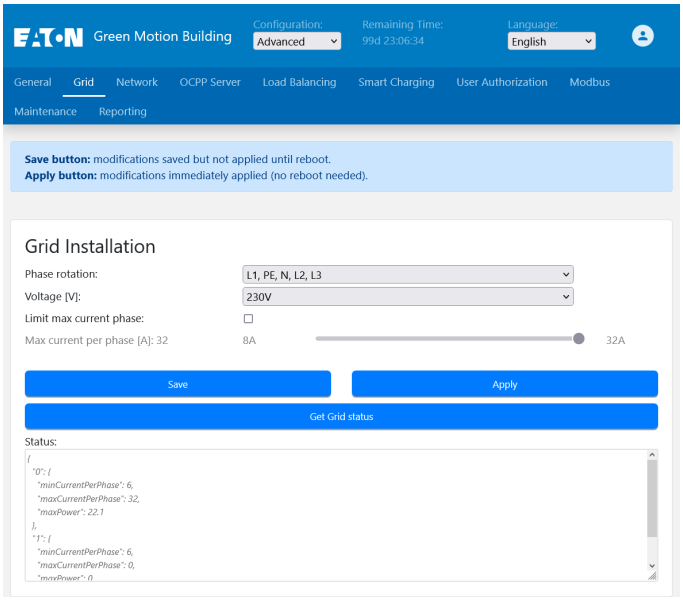

The maximum current value that can be set by the slider is determined by the DIP switch settings. The factory default setting for the maximum current is 32 A. See Section 6.4 for instructions on how to limit the maximum current using the DIP switch. The lowest value between the DIP switch value and the commissioning page value is used by the charger

8.3.2.2 Phase rotation

The default phase connection sequence setup assumes that the phases from the grid are connected to the corresponding AC terminal block inputs as per the following scheme:

- L1 > L1 terminal
- L2 > L2 terminal
- L3 > L3 terminal

To prevent phase unbalance in case EV chargers are installed as specified in section 7.3, additional setup changes are required:

Step 1. Select the appropriate phase connection sequence from the “Phase rotation” drop-down menu according to the connection sequence from the AC grid side.

Step 2. Click “Save” and “Apply”.

Figure 38. Phase rotation drop-down menu

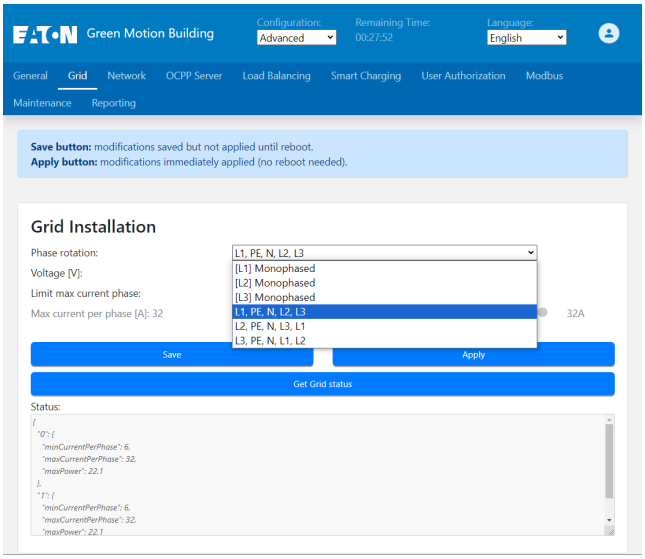

8.3.2.3 Austria OVE R37 compliance mode

As of 1 June 2025, revised technical requirements for electric vehicle charging stations shall apply in Austria in accordance with the TOR low-voltage distribution network connection rules. OVE Guideline R 37 defines a standardized testing framework for verification of grid-compatible operation and establishes uniform technical requirements for electromobility infrastructure. For correct interpretation and application of the requirements, the complete provisions of OVE Guideline R 37 shall be consulted. The official and binding version is available via the following link:
https://www.austrian-standards.at/en/shop/ove-richtlinie-r-37-2024-12-01~p3945361

Free charging is not allowed with Austria compliance mode.
You must disable "Free Charging" prior to activating Austria mode.

Austria Compliance Mode can be enabled from the Web UI. Follow the steps below:

Step 1. Log in to the Web UI

Follow the standard procedure for accessing the charger's Web UI interface.

Step 2. Refresh the Browser Cache

After logging in successfully, refresh the browser cache to ensure the latest UI elements are loaded.

- For Microsoft Edge, press Ctrl + F5.

Step 3. Navigate to the Grid Installation Tab

Once the page reloads, go to the Grid Installation tab.

In this section, you will find an option labeled "OVE R37 (Austria) compliance mode."

Step 4. Enable Austria Compliance Mode

Check the box for OVE R37 (Austria) compliance as shown in the screenshot.

As soon as the checkbox is selected, Austria compliance mode becomes active.

Figure 39. OVE R37 (Austria) compliance mode

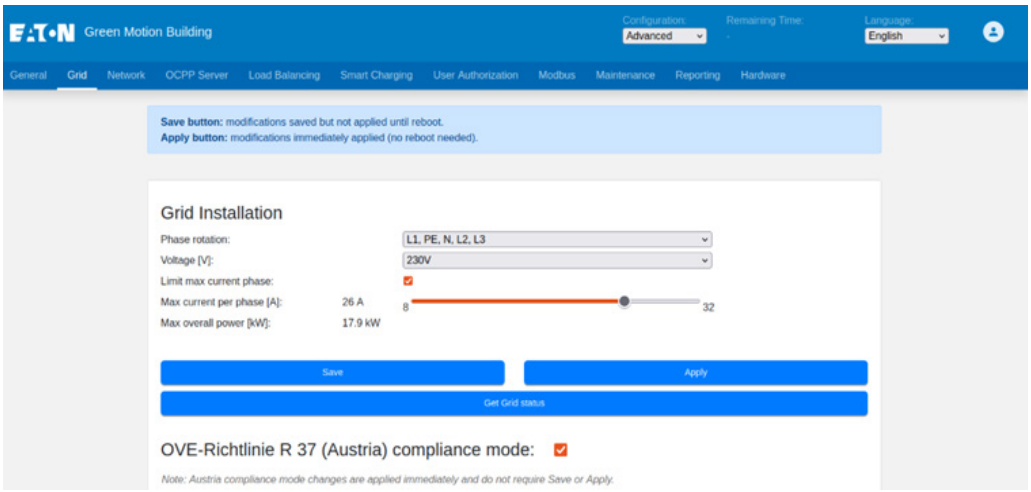

8.3.3 Network

This section contains the configuration related to the network settings.

Figure 40. Configuration page – network

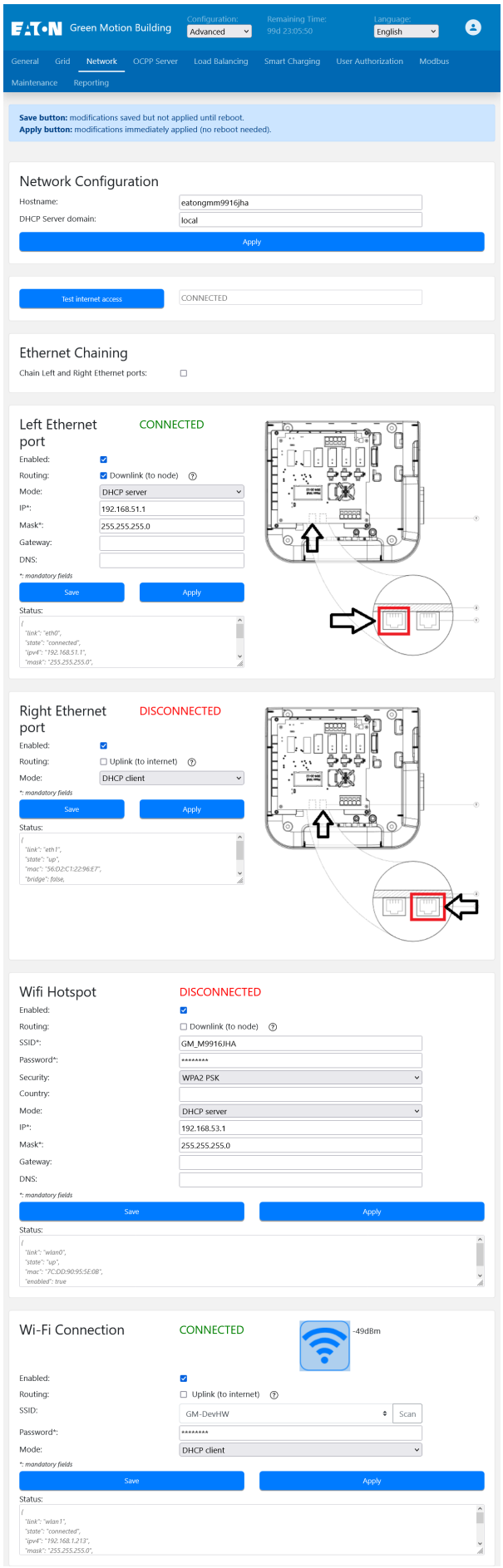

Table 20. Network Configuration

	Description
Hostname	Host name used on the local network. By default, hostnames are a combination of the serial number with eatongm as the standard name.
DHCP server domain	local by default

Clicking the Test internet access button sends a ping to www.google.com to check if the EV charger has access to the internet.

Table 21. Ethernet Chaining

	Description
Chain Left and Right Ethernet ports	Connects each ethernet port in series to the next like the petals of a daisy. It is the simplest way to add more switches in a network. The two ethernet port are 'bridged', so network will appear the same on those two ethernet ports left and right. The mode automatically switches to DHCP client

Table 22. Ethernet port

	Description
Enabled	Enable local network. Required for any communication.
Routing	Only available in "Advanced" mode Define the NAT configuration, it's possible to do a port forwarding to another interface via this feature. The options available depends of the "Mode" and are: **Uplink (to internet)** The uplink port is part of a network, possibly connected to the Internet, and this option: Allows network and internet sharing with Downlink ports. **Downlink (to node)** The downlink port manages a subnet with other nodes, and this option: Routes sub-network traffic to Uplink ports. Changes default fixed address to avoid conflicts. Keeps the port active beyond commissioning period.
Mode	Only for advanced user DHCP server: network server that automatically provides and assigns IP addresses, default gateways and other network parameters to client devices. DHCP client: this is the endpoint receiving DHCP server configuration information. Fixed address: to use for fixed IP address. By default, it is set to Fixed address.
IP	IPv4 address in the local network Default: 192.168.51.1
Mask	Mask for the subnetwork Default: 255.255.255.0
Gateway	IPv4 address to the modem / router
DNS	IPv4 address to the modem / router DNS service

Table 24. Wi-Fi Hotspot (Advanced user only)

	Description
Enabled	Enable hotspot (LAN)
Routing	Only for advanced user Define the NAT configuration, it's possible to do a port forwarding to another interface via this feature. The options available depends of the "Mode" and are: **Uplink (to internet)** The uplink port is part of a network, possibly connected to the Internet, and this option: Allows network and internet sharing with Downlink ports. **Downlink (to node)** The downlink port manages a subnet with other nodes, and this option: Routes sub-network traffic to Uplink ports. Changes default fixed address to avoid conflicts. Keeps the port active beyond commissioning period.
Mode	Only for advanced user DHCP server: network server that automatically provides and assigns IP addresses, default gateways and other network parameters to client devices. DHCP client: this is the endpoint receiving DHCP server configuration information. Fixed address: to use for fixed IP address The default setting is Fixed address.
SSID	SSID is an abbreviation for service set identifier, which is an important identifier for wireless networks. Essentially, an SSID is the name assigned to a Wi-Fi network.
Password	Password to connect the Wi-Fi hotspot
Security	WPA2 PSK This is the minimal security requirement.
Country	NA
IP	IPv4 address in the local network Default: 192.168.53.1
Mask	Mask for the subnetwork Default: 255.255.255.0
Gateway	IPv4 address to the modem / router Default: empty
DNS	IPv4 address to the modem / router DNS service Default: empty

Table 23. Wi-Fi Connection

	Description
Enabled	Enable Wi-Fi connection
Routing	Only for advanced user Define the NAT configuration, it's possible to do a port forwarding to another interface via this feature. The options available depends of the "Mode" and are: **Uplink (to internet)** The uplink port is part of a network, possibly connected to the Internet, and this option: Allows network and internet sharing with Downlink ports. **Downlink (to node)** The downlink port manages a subnet with other nodes, and this option: Routes sub-network traffic to Uplink ports. Changes default fixed address to avoid conflicts. Keeps the port active beyond commissioning period.
SSID	SSID is the network name the charging station will connect. Click Scan button to fill the list of SSID with the available Wi-Fi Networks
Password	Password to connect the Wi-Fi network
Mode	Only for advanced user DHCP server: network server that automatically provides and assigns IP addresses, default gateways and other network parameters to client devices. DHCP client: this is the endpoint receiving DHCP server configuration information. Fixed address: to use for fixed IP address The default setting is Fixed address.

8.3.4 OCPP Server

This section contains the configuration related to communications protocol and OCPP connection, see Figure 40.

The Green Motion Building EV Charger connects to the Eaton Charging Network Manager (CNM) backend using the OCPP 1.6-J protocol. The section is pre-configured, and no changes are required when connecting to CNM.

Figure 41. Configuration page – OCPP

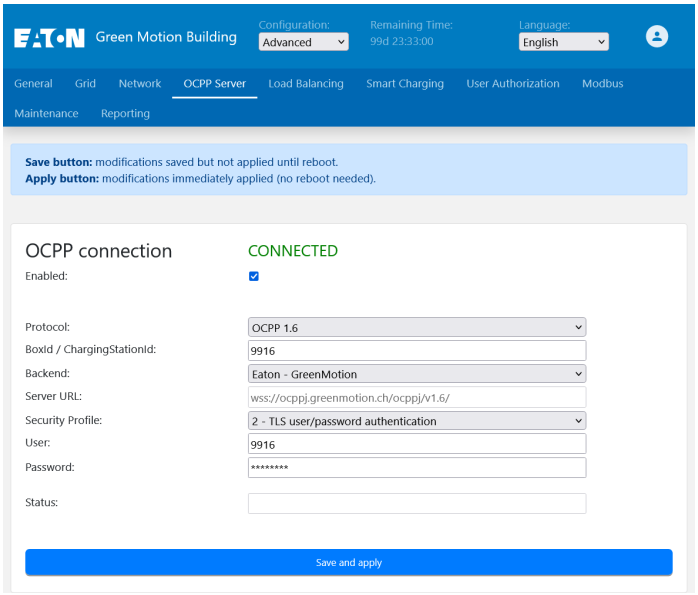

In case the EV charger is used by a Charge Point Operator (CPO) with a third-party backend server, the default configuration parameters must be updated with the parameters provided by the CPO according to the following steps:

Step 1. Set up the correct Charging station Id for the charger. This identification must be also registered at the third-party backend OCPP server.

Step 2. In the field "Backend" select the OCPP Server you wish to establish a connection with. If the backend you want to use is not listed, select "Custom".

Step 3. In the “Server URL” text box, enter the URL of the third-party backend OCPP server. The BoxId / Charging station Id will be added automatically at the end of the “Server URL”.

Step 4. Select a security profile for the OCPP from the drop-down menu. It is recommended to use security profile 2: TLS-based credential authentication.

Step 5. In the “User” text box, enter the username to access the OCCP server.

Step 6. In the “Password” text box, enter the password to access the OCCP server.

Step 7. Click “Save and apply” at the bottom of the tab.

The security profile must match the profile used on the backend server.

Table 25. Fields of the OCPP Server tab

	Description
Enabled	Enable connection with OCPP server.
Protocol	Version of the OCPP protocol. Default is 1.6J
BoxId / ChargingStationId	Identifier of the charging point. Only editable in Advanced view.
Backend	List of pre-configured OCPP backends
Server URL	URL used for backend connection. “BoxId/ChargingStationId” are appended to the end of the URL.
Security profile	OCPP Security profile level. Level 0,1,2 are supported. Levels 0 and 1 display a security warning message.
User	OCPP username
Password	OCPP password
Status	OCPP error messages if connection not stablished.

8.3.5 Load Balancing

While configuring a network of EV chargers for load balancing, select the network configuration (refer to Section 8.4 for details). Once a network configuration is finalized, and EV charger installation and the wiring completed, select an EV charger to act as the network master (henceforth referred to as the Master). Configure the other connected EV chargers to act as nodes (henceforth referred to as the Nodes). When connected to the network, configure the settings for the Master unit first, followed by configuring the Nodes.

8.3.5.1 Master configuration

To set the EV charger as the Master with static load balancing, set the parameters as per the following steps:

Step 1. Go to the "Load Balancing" section (Figure 41).

Step 2. Check the "Enable Loadbalancing" checkbox. A set of new configuration options will appear.

Step 3. Set "Mode" to "Master"

Step 4. The Master hostname for the EV charger is prefilled with the hostname from the Network section, both must be the same. The hostname will be used by other EV chargers configured as nodes to enable autodetection of the EV charger configured as Master

Step 5. Enter a value for the "Maximum current for the charging site [A]". This value depends on the current rating of your circuit breakers in front of the EV chargers

Step 6. Check the "Prioritize this charger" checkbox in case the EV charger needs to be prioritized over the other EV chargers. It will enable maximum charging current for the prioritized EV charger during current limiting events.

Step 7. The "Fallback current for the charger [A]" is set by default with a value of 0 Amps, but this value can be set up to a higher value to allow the Node to apply that max. current in case of temporary disconnection from the Master or the OCPP server. This parameter could be modified by advanced user in "Advanced mode".

Figure 42. EV charger configured as Master with static load balancing

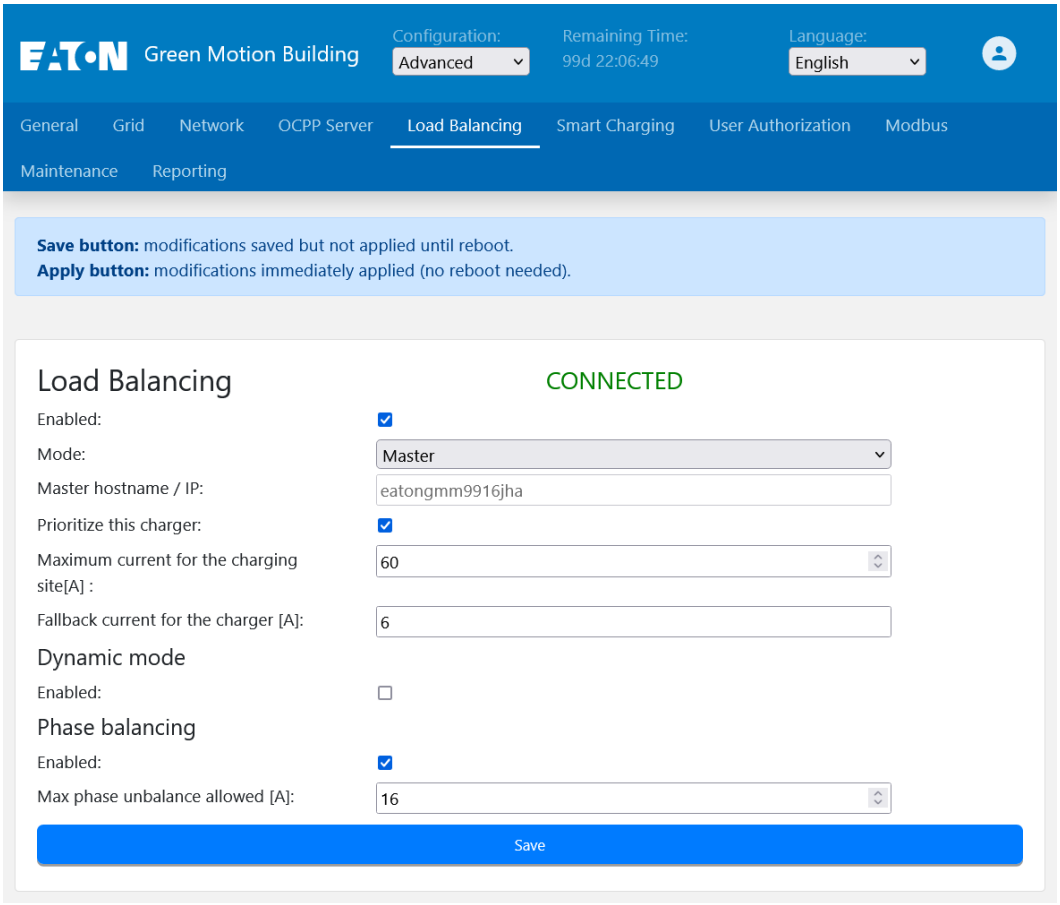

8.3.5.1.1 Dynamic load balancing

If dynamic load balancing is required, set the parameters as per the following steps:

Step 1. Go to the “Dynamic mode” section.

Step 2. Make sure the “Enabled” checkbox is checked.

Step 3. Enter a value for the ”Maximum current for the building [A]”

Step 4. Select the model (manufacturer) of the energy meter installed in the building. See Section 6.9 for a list of recommended energy meters, tested to work with Green Motion Building EV chargers.

Step 5. Enter the IP address of the energy meter.

Figure 43. Dynamic load balancing configuration

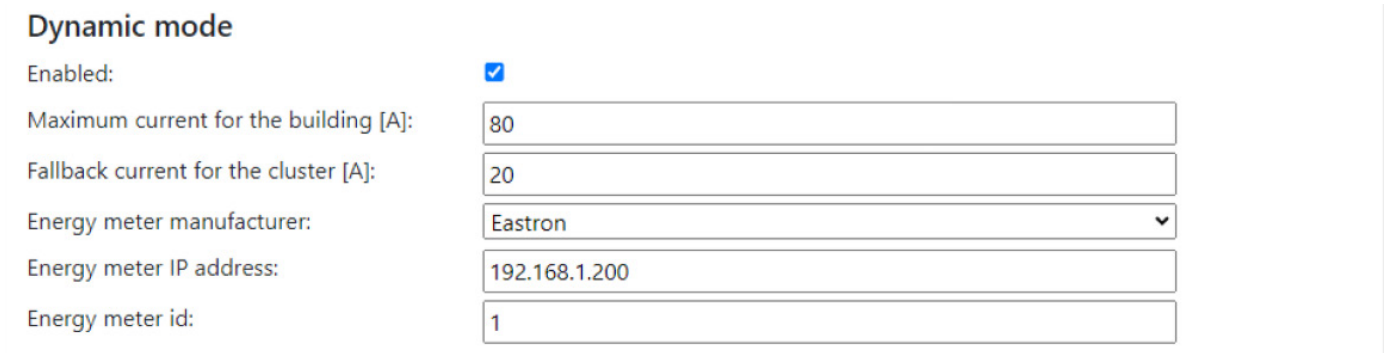

Step 6. Click the “Check meter” button. If the connection with the energy meter is established successfully, its status will be indicated as illustrated in Figure 43.

Figure 44. Energy meter status

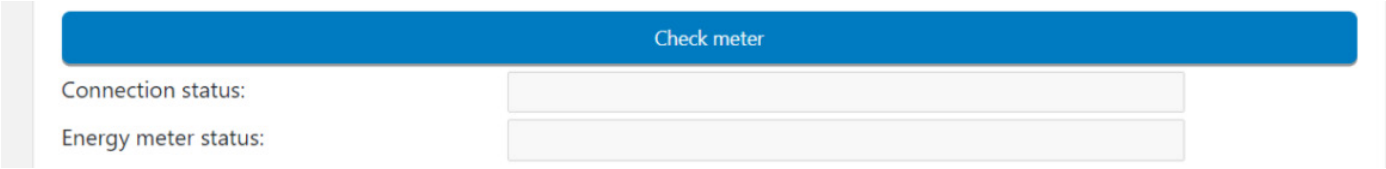

Step 7. The “Fallback current for the cluster [A]” is set by default with a value of 0 Amps, but this value can be set up to a higher value to allow the Master to distribute that max. current to the Nodes in case of temporary disconnection with the energy meter. This parameter could be modified by advanced user in “Advanced mode”.

8.3.5.1.2 Phase balancing

The phase balancing is set by default with max phase unbalance at 16 A. These parameters could be modified by advanced user in “Advanced mode”. To make the changes follow below steps:

Step 1: Click on “Advanced” at the top of configuration page (see Figure 44).

Step 2. Go to the “Phase balancing” section.

Step 3. Make sure the “Enabled” checkbox is checked.

Step 4. Select the "Max phase unbalance allowed [A]". Consult the relevant local regulations when setting this value.

Figure 45. Phase balancing configuration

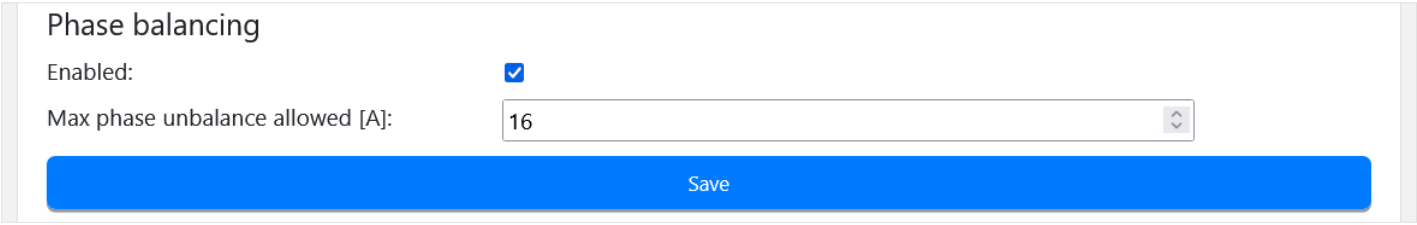

Step 6. Click "Save" to save all configuration.

Step 7. Click "Restart App".

8.3.5.1.3 Load balancing offline mode

When the chargers are configured in offline mode by disabling OCPP connection, a pairing process is required to connect all the Nodes to the Master. After saving the configuration of the Master and restarting the application, follow the next steps:

Step 1: Disable the OCPP connection on the OCPP Server tab by unchecking the "Enabled" checkbox. Save and apply.

Step 2: Configure all the Load balancing settings as done on chapter 8.3.5.1

Step 3: Click in the “Start node pairing” button that appears under the section “Nodes connection status”. See Figure 45.

Step 4: As soon as the Nodes are getting configured, the list under “Nodes connection status” will be populated with each of them. Indicating their BoxId, Connector, current EVSE state and connection status.

Step 5: The section “Certificate management” will be populated with the certificates of each Node, indicating their expiration date, validity, and status. To remove a Node that should not be part of the set up, delete the certificate by clicking the “Delete” button for the certificate. This section is displayed in “Advanced mode”. See Figure 45.

Step 6: Click the “Pairing” button again to stop the pairing process once all the nodes are connected. The pairing process has also an automatic timeout corresponding to the commissioning time of the Configuration page. This pairing / commissioning time is incremented by 30 minutes each time a new node is connected.

Figure 46. Node connection status and certificate management

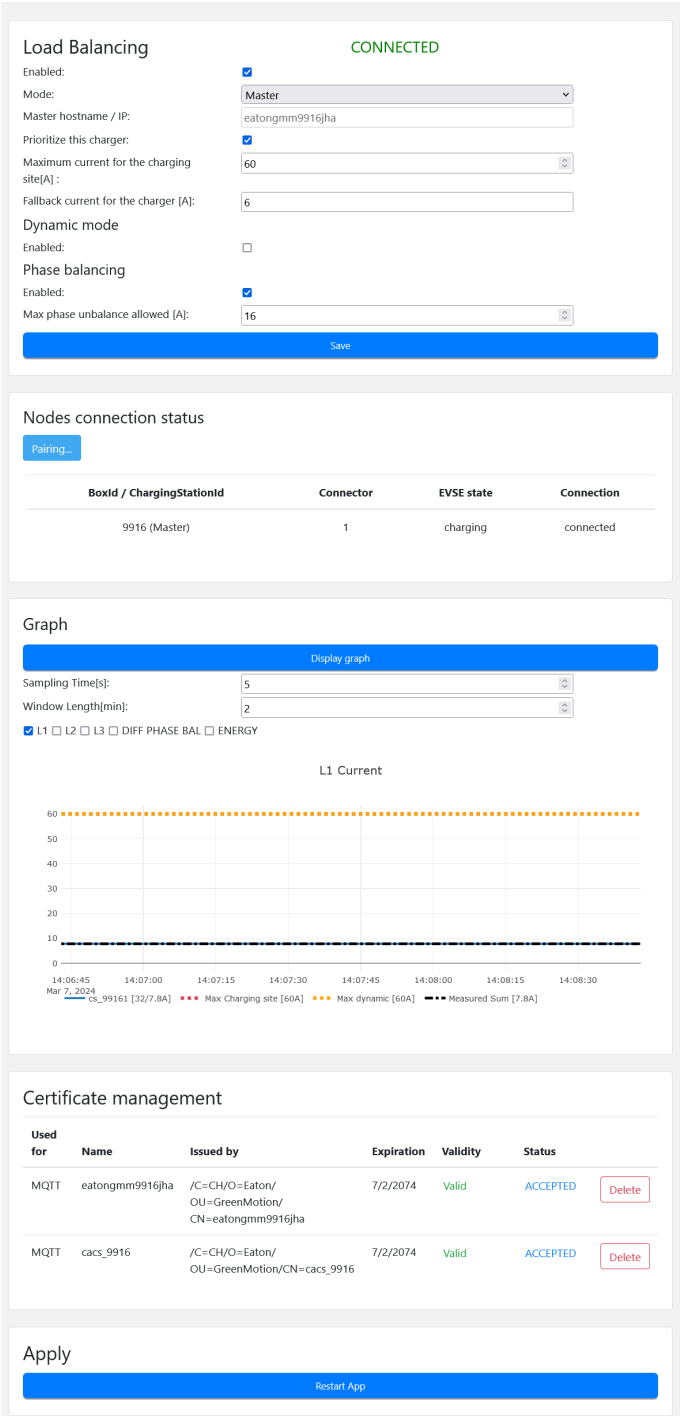

8.3.5.2 Node configuration

Node configuration is similar in Online or Offline Load Balancing.

To set the EV charger as the Node with static load balancing, set the parameters as per the following steps:

Step 1. Go to the “Load balancing” section (Figure 53).

Step 2. Check the “Enabled” checkbox. A set of new configuration options will appear.

Step 3. Set “Mode” to “Node”

Step 4. Make sure the name of the EV charger configured as Master is visible in the Master hostname/IP text box. In case the name is not detected, enter the link parameters manually

Step 5. Check the “Prioritize this charger” checkbox in case the EV charger needs to be prioritized over the other EV chargers. It will enable maximum charging current for the prioritized EV charger during current limiting events.

Step 6. The “Fallback current for the charger [A]” is set by default with a value of 0 Amps, but this value can be set up to a higher value to allow the Node to apply that max. current in case of temporary disconnection from the Master. This parameter could be modified by advanced user in “Advanced mode”.

Figure 47. EV charger configured as Node with load balancing

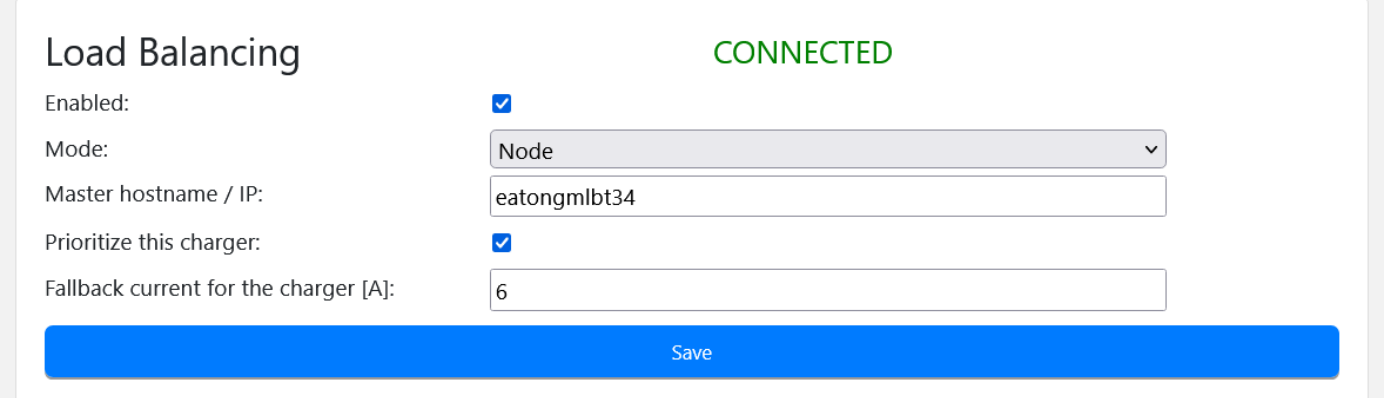

8.3.6 Smart Charging

The smart charging permits to the owners to schedule and optimize charging times based on factors such as electricity rates, grid demand, and the vehicle's energy needs. The goal is to maximize the use of energy source and minimize strain on the power grid, ultimately leading to a more cost-effective operation. The smart charging gives the ability to limit the power/current of the charging station during specified period.

Figure 48. Configuration page – smart charging settings

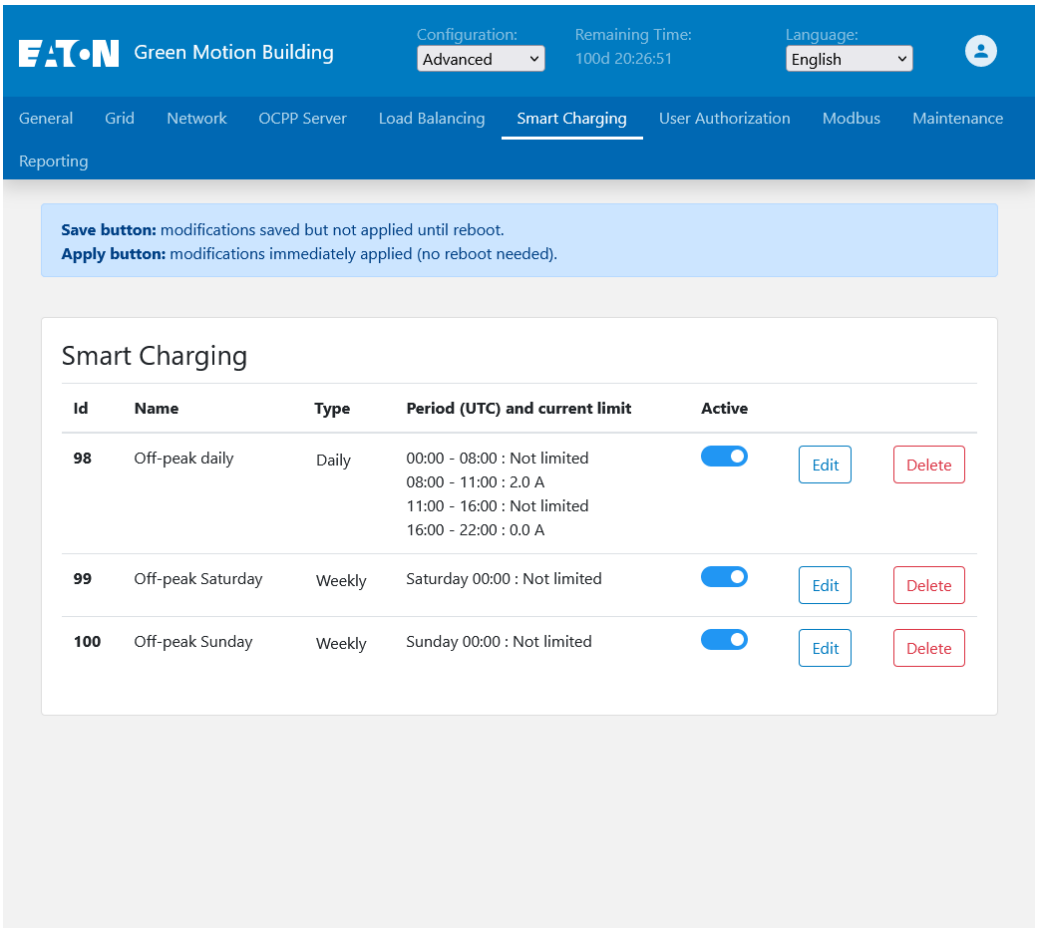

Table 26. Fields of the Smart Charging table

	Description	Remarks
Id	Smart charging profile Id unique for each profile	Read-only, Id is used to edit/delete via OCPP backend
Name	Short name of profile, used to define the purpose	Read-only, predefined profile name convention: **Profile Id** / **Description** 98 / Off-peak daily 99 / Off-peak Saturday 100 / Off-peak Sunday 123 / LoadBalancing 999 / MobileApp
Type	Daily: the schedule restarts every 24 hours, at the same time Weekly: the schedule restarts every 7 days, at the same time and day-of-the-week	Read-only

Period (UTC) and current limit	This field is linked to 'Current limit (A)'. The limit is the max that the charging station will use. The vehicle can use less. Example: 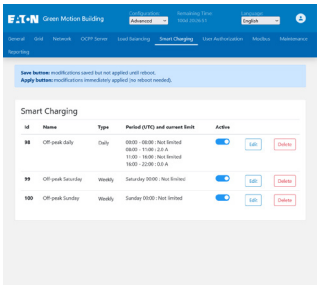 Behaviour No current limitation from 00:00 to 08.00 No current delivered from 08.00 to 11:00	Read-only, the time is defined in UTC and limit is in ampere.
Active	3 profiles are always present by default and disabled. To activate them press on the switch button.	Activate/Deactivate the profile
Edit	Each profile can be modified. Only advanced user should modify the values. Please refer to 'Smart charging Profile Configuration' for more details.	Edit/Modify the profile
Delete	Delete the profile if the profile exists and has been already saved.	If there is no profile active on the charging station, pressing the 'Delete' button will return an Error because the profile is not running/active. 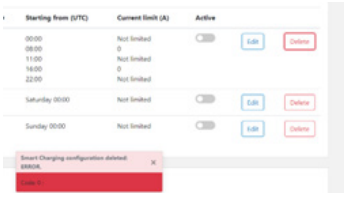 Three profiles are always displayed to support editing, by default there are not active: 98: Off-peak daily 99: Off-peak Saturday 100: Off-peak Sunday

8.3.6.1 Smart Charging Profile Configuration

Figure 49. Smart Charging Profile configuration

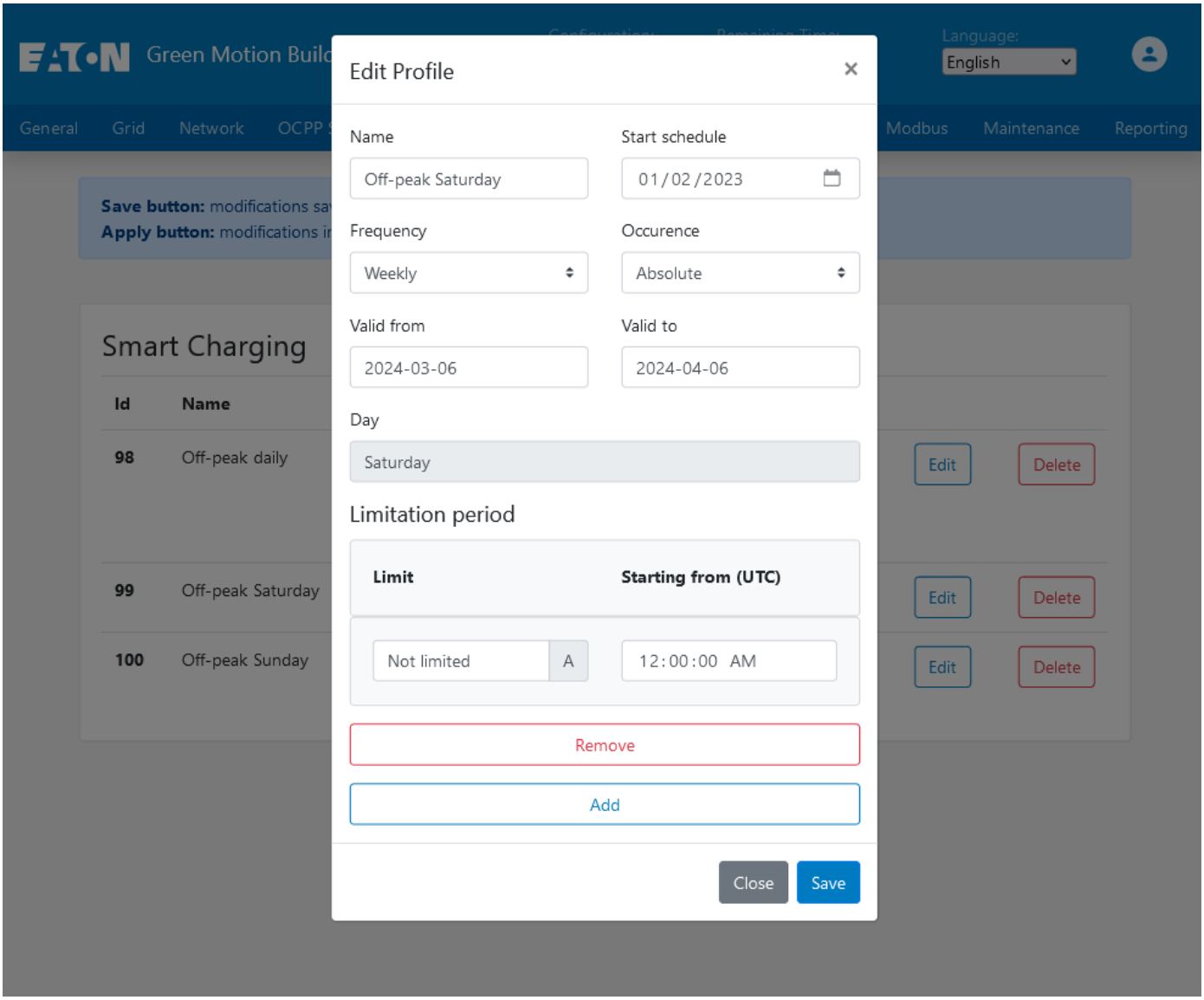

Table 27. Fields in the Smart Charging Profile edition

	Description
Name	Name of the profile. By default, non-predefined profiles are displayed as Profile XX, where XX is the profile ID.
Frequency	Type of recurrence of a charging profile. Daily: the schedule restarts every 24 hours, at the same time Weekly: the schedule restarts every 7 days, at the same time and day-of-the-week
Occurrence	Absolute: Schedule periods are relative to a fixed point in time defined in the schedule. Recurring: The schedule restarts periodically at the first schedule period.
Start schedule	Starting point of an absolute schedule. If absent the schedule will be relative to start of charging.
Valid from	Point in time at which the profile starts to be valid. If absent, the profile is valid as soon as it is received by the Charge Point.
Valid to	Point in time until the profile is still valid.
Limitation period – Limit	Charging rate limit during the schedule period in Amperes.
Limitation period – Starting from (UTC)	Start of the limitation period. The value of StartPeriod also defines the stop time of the previous period.
Remove	Remove last schedule period
Add	Add another schedule period

8.3.7 User authorization

The user authorization to start charging is granted to users using the local RFID card reader. This section describes the authorization configuration.

8.3.7.1 Online mode

In online mode, the EV charger can be configured in Free mode (Plug and Start) with no authentication or with Authenticated Users using the OCPP server for authentication. Users can use an RFID card or a dedicated mobile app linked to the server for access.

Free

In Free mode (Plug and Start), users can start and stop charging without authentication.

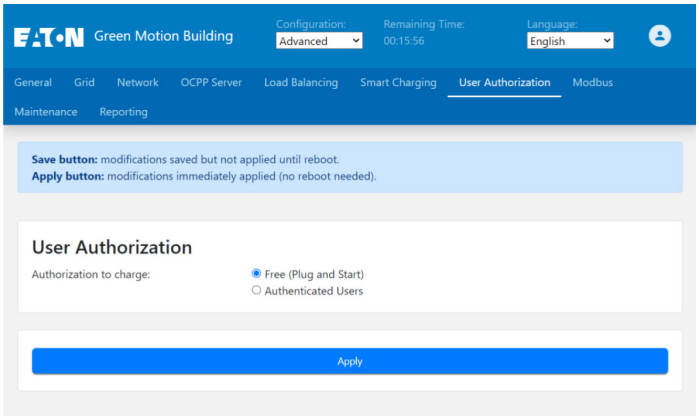

Authenticated Users

Users need to authenticate with an RFID tag, used to query the authorization from the OCPP Charging Station Management System.

Further configuration defines if the device shall store authorization data locally while connected and use that information when temporarily disconnected from the OCPP Charging Station Management System.

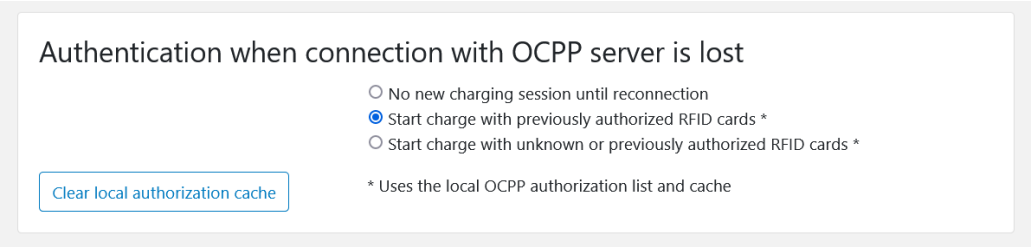

a. No new charging session until reconnection

During disconnection, users are not allowed to start charging. No local authorization data is stored nor used.

b. Start charge with previously authorized RFID cards

During disconnection, the device uses authorization data available locally. Users previously authorized when the charging station was connected will continue to be accepted and will be able to perform a charge. Other users will not be authorized to charge. Once reconnected the charging station will synchronize the transaction with the Charging Station Management System.

c. Start charge with unknown or previously authorized RFID cards

If the device is disconnected, the device uses locally available authorization data. Users previously authorized when the charging station was connected and users whose authorization status is unknown are authorized to start charging. The purpose here is to allow regular users to charge, with the risk being that this mode permits users without credit or without any valid pass to perform a charge. Once reconnected the charging station will synchronize the transaction with the Charging Station Management System.

The local authorization cache has a capacity to store up to 200 RFID cards. To clear this cache, utilize the Clear Authorization Cache button.

8.3.7.2 Offline mode

In this mode, the charging station operates independently without any connection to a Charging Station Management System (CSMS). No internet connection is required for the charging station to function effectively. The EV charger can be configured in Free mode (Plug and Start) with no authentication or with Authenticated Users using a local RFID cards list (distinct from OCPP local data).

Step 1. Disable the OCPP connection on the OCPP Server tab by unchecking the "Enabled" checkbox. Save and apply.

Free

When Free (Plug & Start) is selected, the EV charger bypasses the need for authentication. Charging automatically begins as soon as the car is connected to the charger.

Authenticated Users

Authentication required by RFID. User must be added in the 'Local RFID authorization list'.

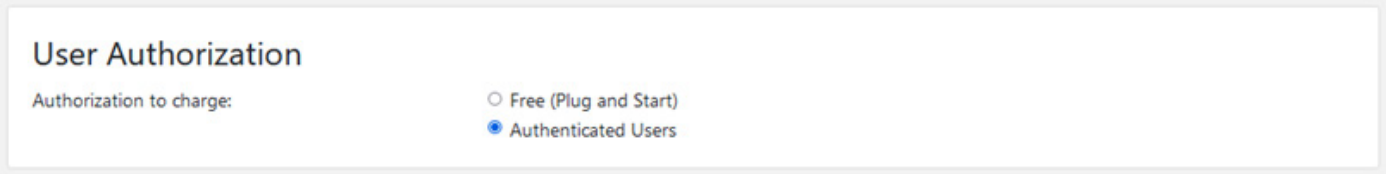

The idea is to accept only users added locally on the charging station. Please refer to the following section to add/remove RFID cards.

Figure 50. User Authorization in offline mode

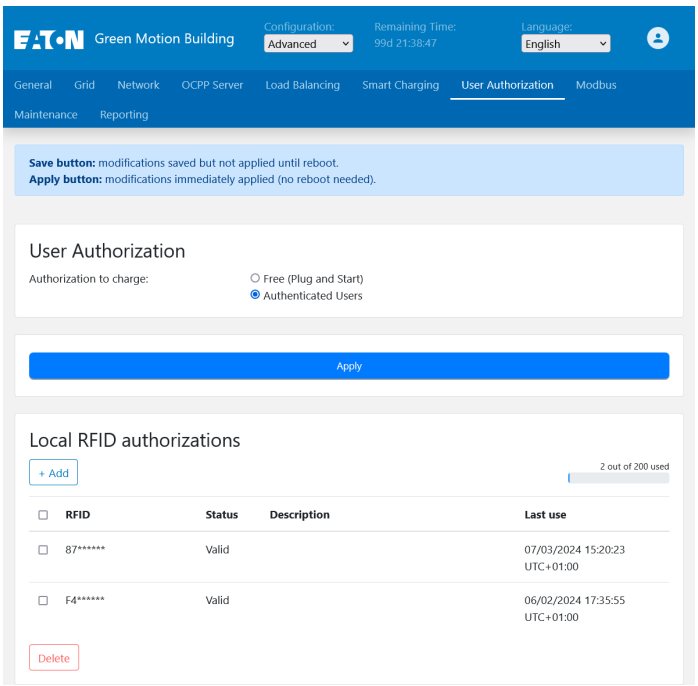

8.3.7.3 Add RFID cards locally

Step 1. Click on +Add

Step 2. If you have an RFID card, physically swipe it on the designated reader. If swiping the card is not an option, manually input the serial number associated with the RFID card.

Step 3. (Optional) Click on Operator if you want to use this card in the future to enter pairing mode where swiped cards are added or removed immediately.

Step 4. (Optional) Add a Description of the Card. If you want to provide additional context or details about the card, enter a description.

Look for a text box where you can input the description.

Step 5. Click on ADD RFID

If successful, a confirmation message will appear (e.g., “Success! RFID card added.”)

Figure 51. Adding RFID card

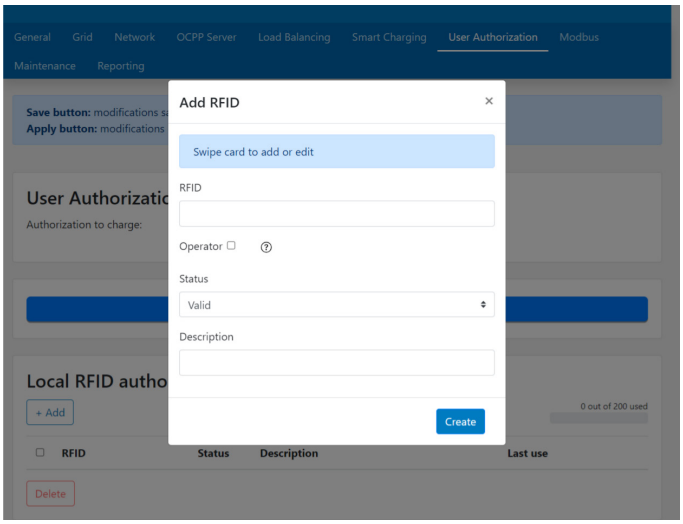

8.3.8 EMS Modbus TCP Service

This section contains the configuration related to the EMS Modbus TCP/IP service, see Figure 50.

The Green Motion Building EV chargers can be seamlessly integrated into the Eaton Building Energy Management Software (BEMS) to enable an end-to-end solution. EV chargers communicate with BEMS using the Modbus TCP/IP communication protocol.

Steps to configure the EV charger to work with Eaton BEMS solution:

Step 1. Go to "EMS Modbus TCP service."

Step 2. Check the "Enabled" checkbox. A set of new configuration options will appear.

Step 3. Confirm the pop-up message.

Step 4. Enter the parameters of the EMS installation:

- The IP address on which an EMS is accessible as a client. This IP address will be authorized.
- Enter Modbus TCP Port parameters.

Step 5. Click Apply at the bottom of the configuration page.

Figure 52. Configuration Page – EMS Modbus TCP Service

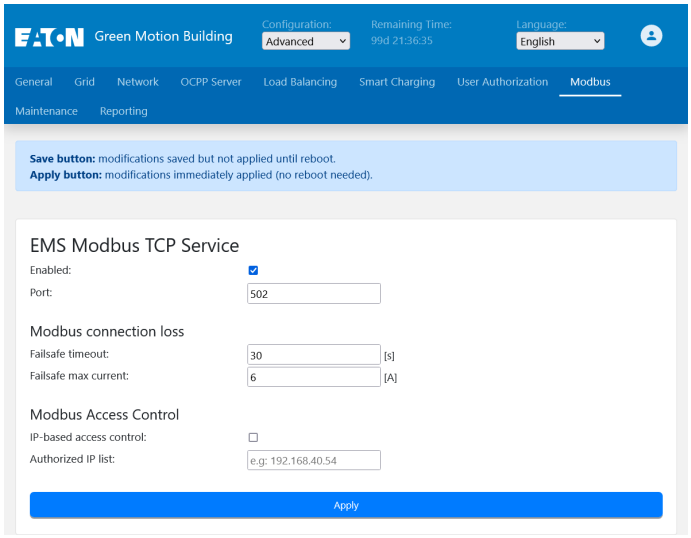

Table 28. Modbus TCP/IP configuration

	Description
Enabled	Enable the service.
Port	Port used for the TCP connection. By default: 502
Failsafe timeout	Failsafe delay after EMS disconnection. By default: 30s
Failsafe max current	Charger max current when failsafe timeout has elapsed after EMS disconnection. By default: 6A
IP-based access control	Authorize selected IPs to connect.
Authorized IP list	Only available if access control is enabled. IP addresses of the clients allowed to connect. List IP addresses separated with a comma. Example: 192.168.1.1, 192.168.1.3

Refer to Eaton secure configuration guidelines for installing the product securely. You can download the guidelines from the product page at www.eaton.com/greenmotion.

8.3.9 Maintenance (Advanced Mode)

This section contains the configuration related to the maintenance and reserved to the advanced view, see Figure 51.

Figure 53. Configuration Page – Maintenance

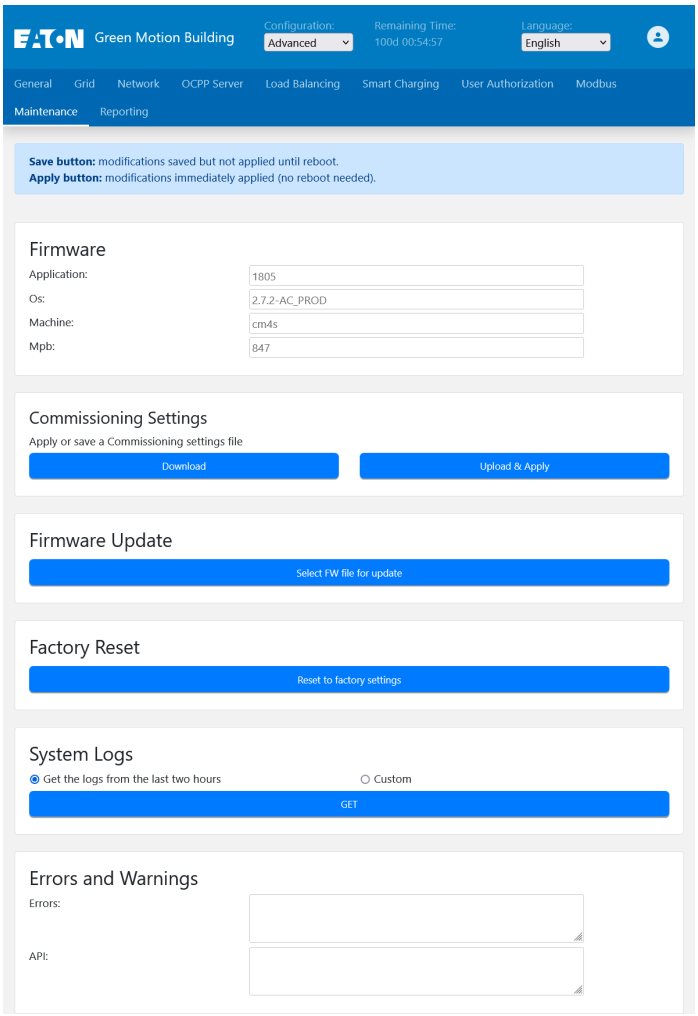

Table 29. Commissioning Settings

	Description
Download	Download a configuration file with all current variables of this charging station except those unique, confidential or factory generated. The downloaded configurations are: - Main - OCPP - Wi-Fi - Ethernet Password and Username are excluded.
Upload & Apply	Upload a configuration containing variables to update.

This section will download all configuration from this charging station in a file named <Serial number>.json.

8.3.10 EMS Reporting (Advanced Mode)

This section contains the configuration related to the reporting.

Figure 54. Configuration Page – Reporting

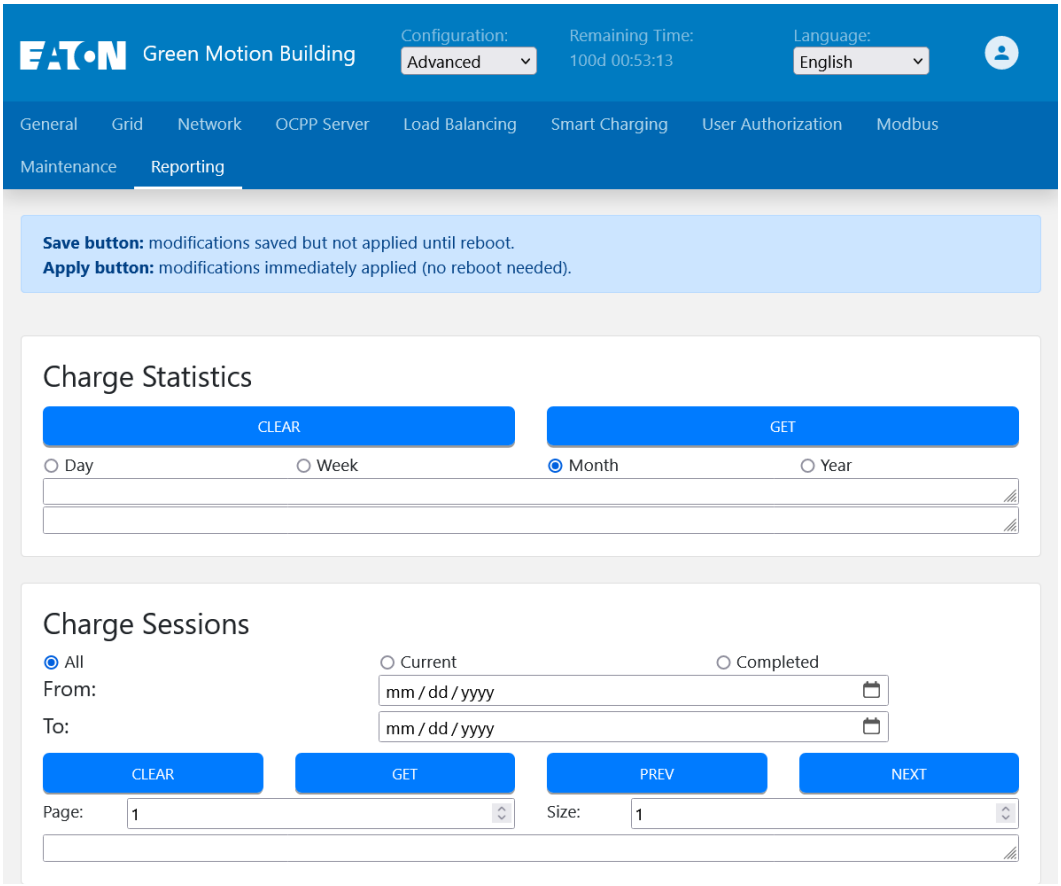

8.4 Charger network configuration

The EV chargers participating in the load balancing network must be configured either as a network Master or a Node.

- Master EV charger: An EV charger configured as the Master exerts complete control over and initiates commands to the other EV chargers in the network, also called the Nodes. Any Green Motion Building EV charger can be configured as the Master.
- Node EV charger: An EV charger configured as a Node responds to the commands from the Master EV charger in the network.

The number of nodes that the Master EV charger can support is dependent on the selected network configuration.

8.4.1 Configuration 1: All EV chargers in the network connected to the internet via an Ethernet switch - RECOMMENDED

The maximum number of connected EV chargers in this configuration depends on the router limitations, with an upper limit of 50, including the EV charger configured as the Master. All the EV chargers should be part of the same local network. If dynamic load balancing is enabled, the building energy meter should be also connected to the same LAN. The energy meter parameters should be set up in the configuration of the EV charger designated as the Master. Refer to Section 8.3.5 for more details.

Figure 55. Network diagram: All EV chargers connected via Ethernet switch (RJ45 cable)

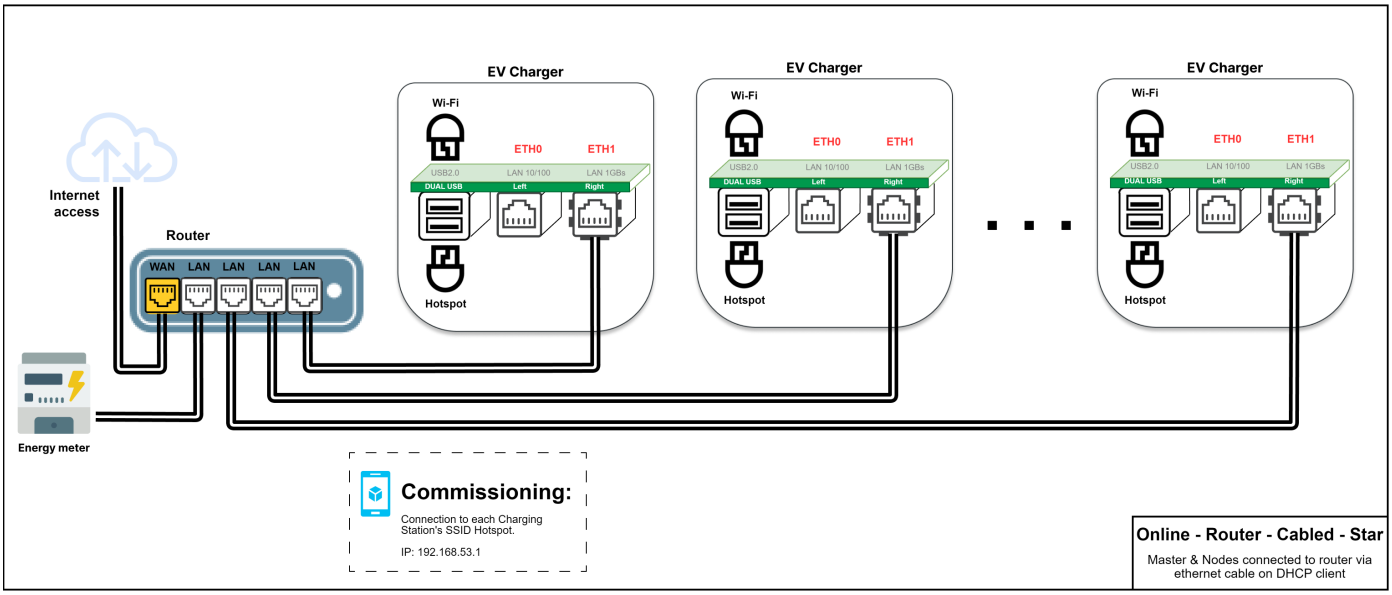

This topology is recommended when networking EV chargers to achieve a robust installation, as the failure of one EV charger will not affect the entire network.

The Ethernet RJ45 cable should be connected to the right Ethernet port (ETH1).

8.4.1.1 Ethernet connection settings for the Master and Node EV chargers

To configure an Ethernet connection for EV chargers (both Master and Node), follow these steps:

Step 1. Go to the “Right ethernet port” section (Figure 55).

Step 2. Make sure the “Enabled” checkbox is checked.

Step 3. Set “Mode” to “DHCP client”.

Step 4. Click “Save” and “Apply.”

Figure 56. Ethernet (ETH1) connection settings for the Master and Nodes

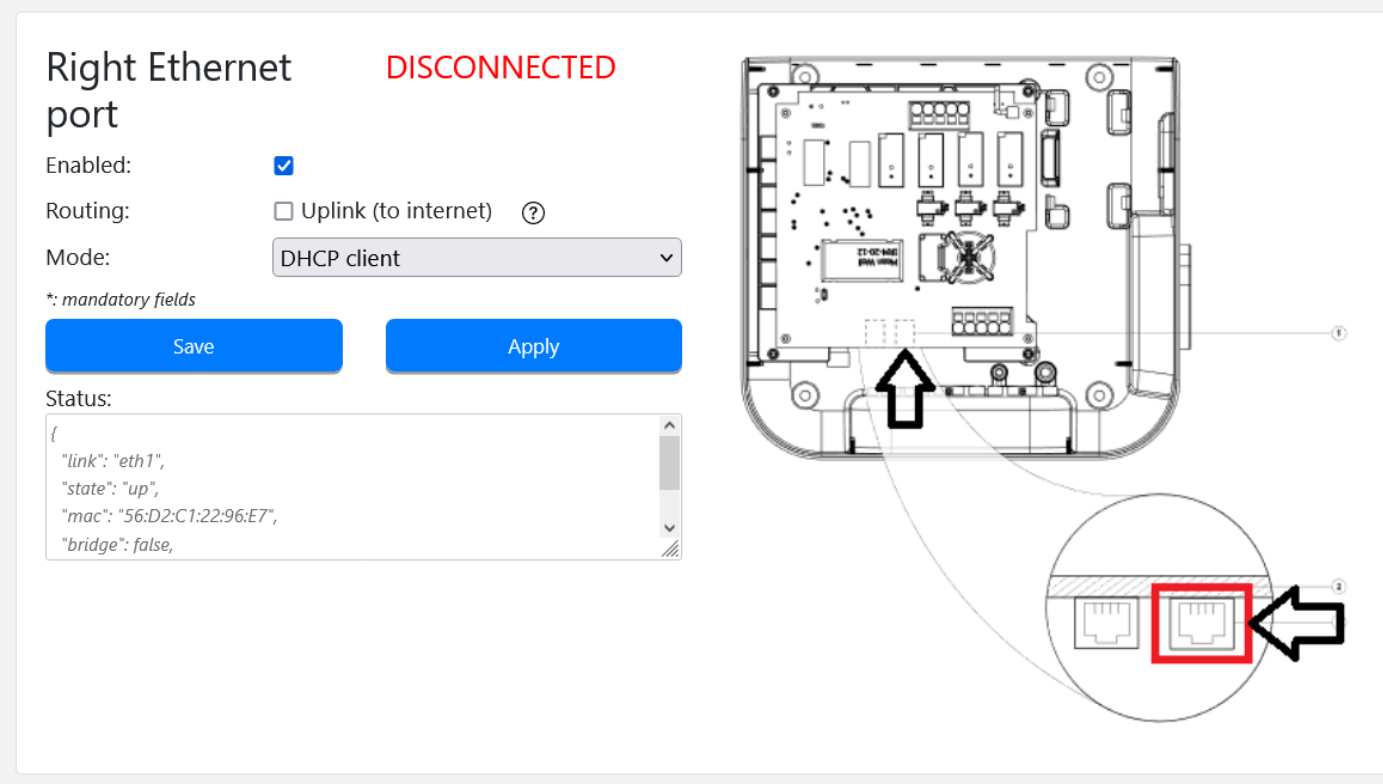

8.4.2 Configuration 2: All EV chargers in the network connected to the internet via Wi-Fi router

The maximum number of connected EV chargers in this configuration depends on router limitations. The maximum is 30. The installer is responsible to ensure sufficient signal strength, coverage, and data availability of the Wi-Fi network.

Figure 57. Network diagram: All EV chargers connected via Wi-Fi router

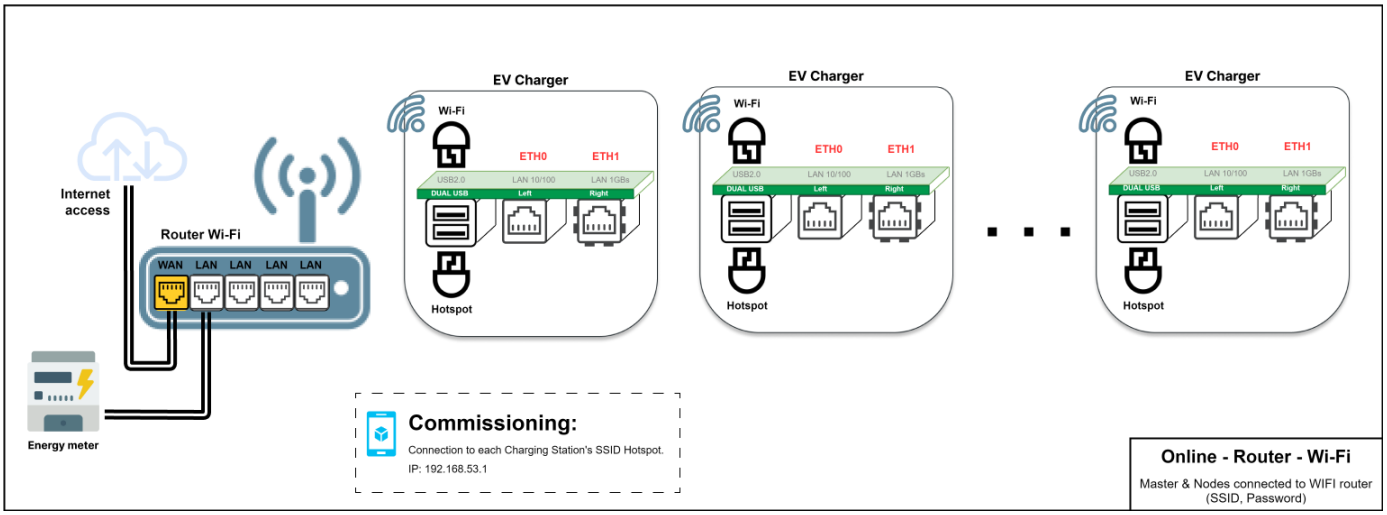

8.4.2.1 Wi-Fi connection settings for Master and Node EV chargers

To configure a Wi-Fi connection for EV chargers (both Master and Node), proceed as per the following steps:

Step 1. Go to the "Wi-Fi connection" section (Figure 57).

Step 2. Enter SSID information (also available as a selection from the list).

Step 3. Enter the password for the selected SSID.

Step 4. Set "Mode" to "DHCP client".

Step 5. Click "Save" and "Apply."

Figure 58. Wi-Fi connection settings for the Master and Nodes

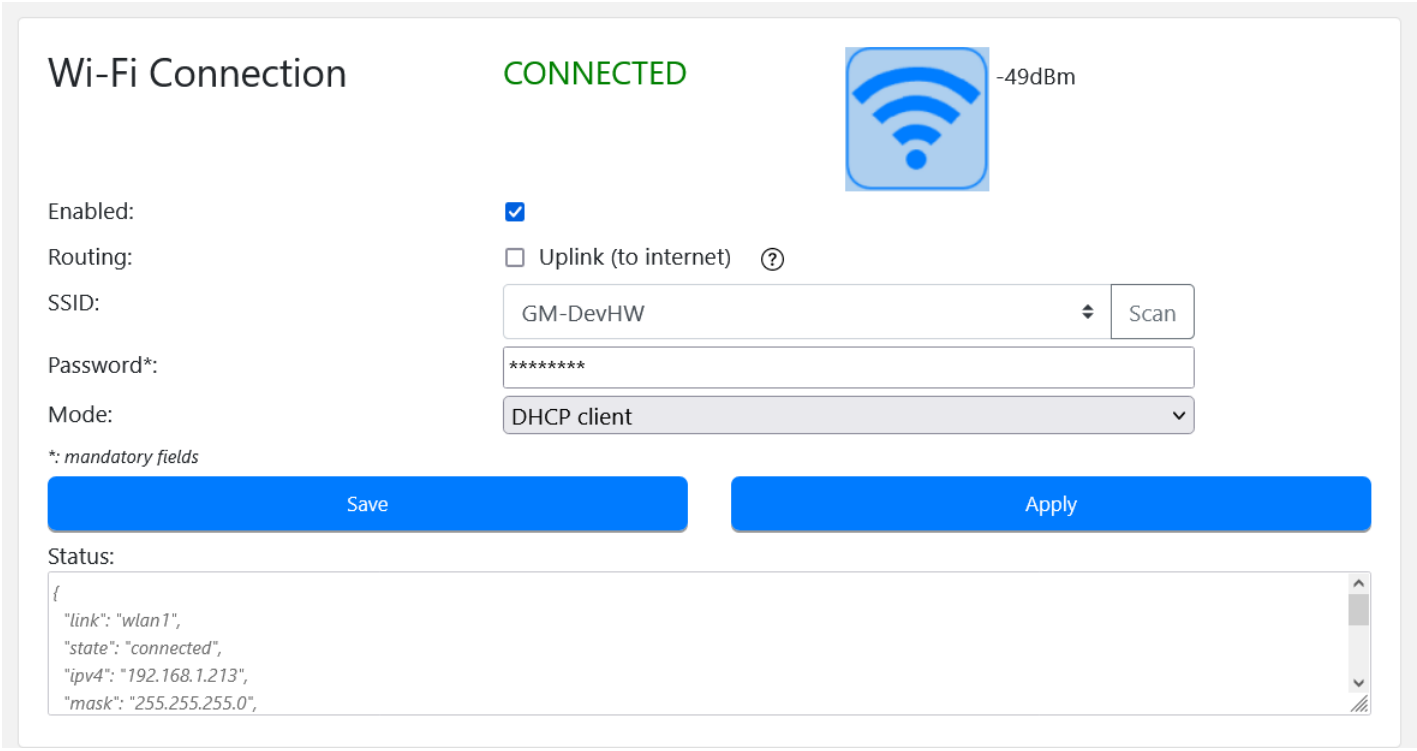

8.4.3 Configuration 3: Master connected to the internet via Wi-Fi, Nodes connected to Master and each other in daisy-chain topology using RJ45 cable.

The maximum number of connected EV chargers in this configuration is 15. When creating a daisy-chain network using RJ45 cable, it is important to consider the locations of the Ethernet ports on the EV charger:

- ETH0 (left port) of the Master should be connected to the ETH1 (right port) of Node 1.
- ETH0 (left port) of Node 1 should be connected to the ETH1 (right port) of Node 2.
- ETH0 (left port) of Node (n-1) should be connected to the ETH1 (right port) of Node (n).

Figure 59. Network diagram: Master connected via Wi-Fi, Nodes daisy-chained to Master and each other

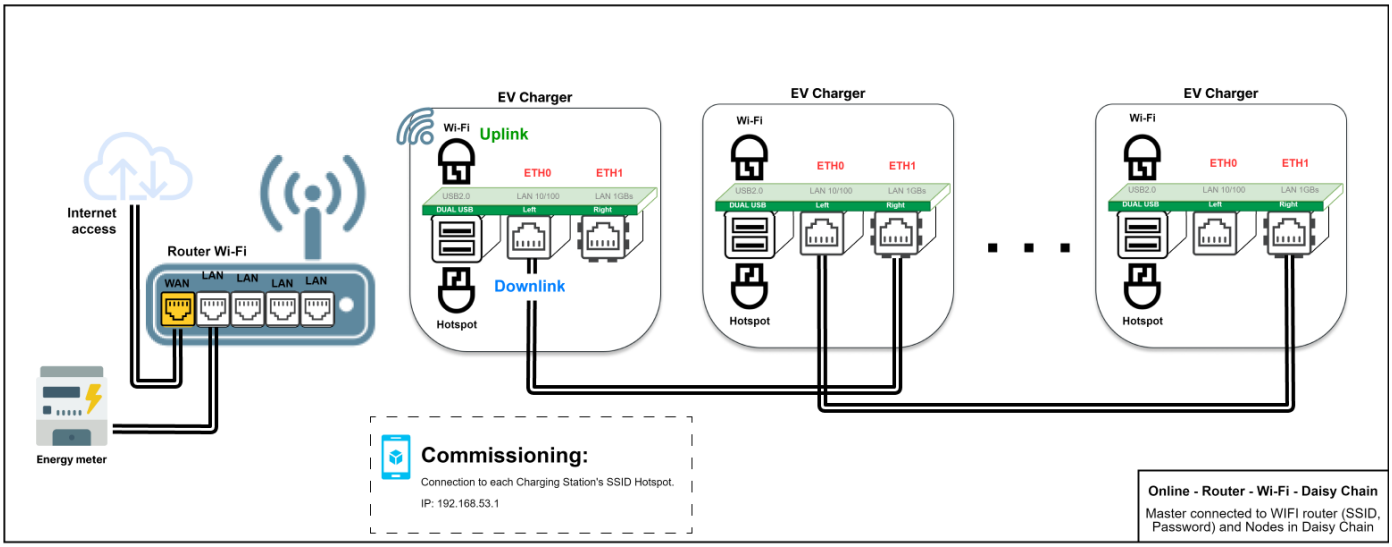

8.4.3.1 Network connection settings: Master

Configuring the Master EV Charger includes setting up Wi-Fi and ETH0 port parameters. A qualified person performing the installation should have a good understanding of IP network installation and commissioning.

To configure the Master EV charger, select the “Advanced” configuration first:

- Go to the top of the configuration page (Figure 59).
- Set “Configuration” to “Advanced” by selecting the option from the drop-down menu.

Figure 60. Selecting advanced configuration settings

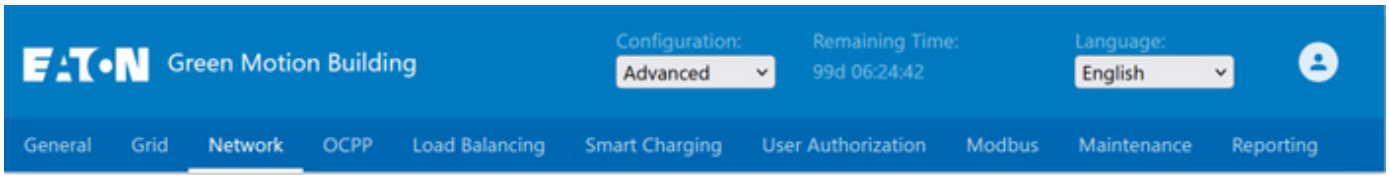

Steps to configure Wi-Fi connection settings:

Step 1. Go to the “Wi-Fi connection” section (Figure 60).

Step 2. Make sure the “Enabled” checkbox is checked.

Step 3. In the “Routing” field, select “Uplink (to internet)” from the drop-down menu.

Step 4. Enter SSID information (you can also select it from the list).

Step 5. Enter the password for the selected SSID.

Step 6. Set “Mode” to “DHCP client”.

Step 7. Click “Save” and “Apply.”

Figure 61. Wi-Fi connection settings for Master EV Charger

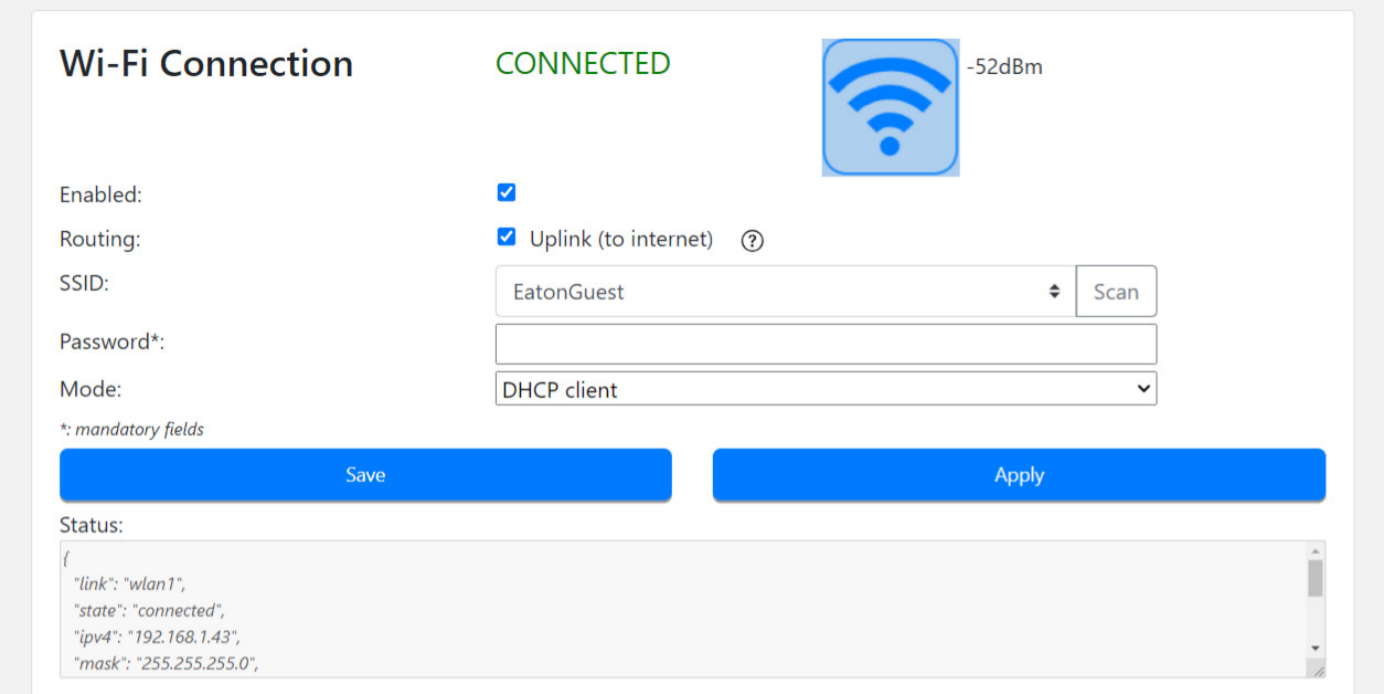

Steps to configure Ethernet (ETH0) connection settings:

Step 1. Go to the “Left Ethernet port” section (Figure 61)

Step 2. Make sure the “Enabled” checkbox is checked.

Step 3. In the “Routing” field, select “Downlink (to node)”.

Step 4. Set “Mode” to “DHCP server”.

Step 5. Enter the local network connection parameters.

Step 6. Click “Save” and “Apply.”

Figure 62. Ethernet (ETH0) connection settings for the Master EV Charger

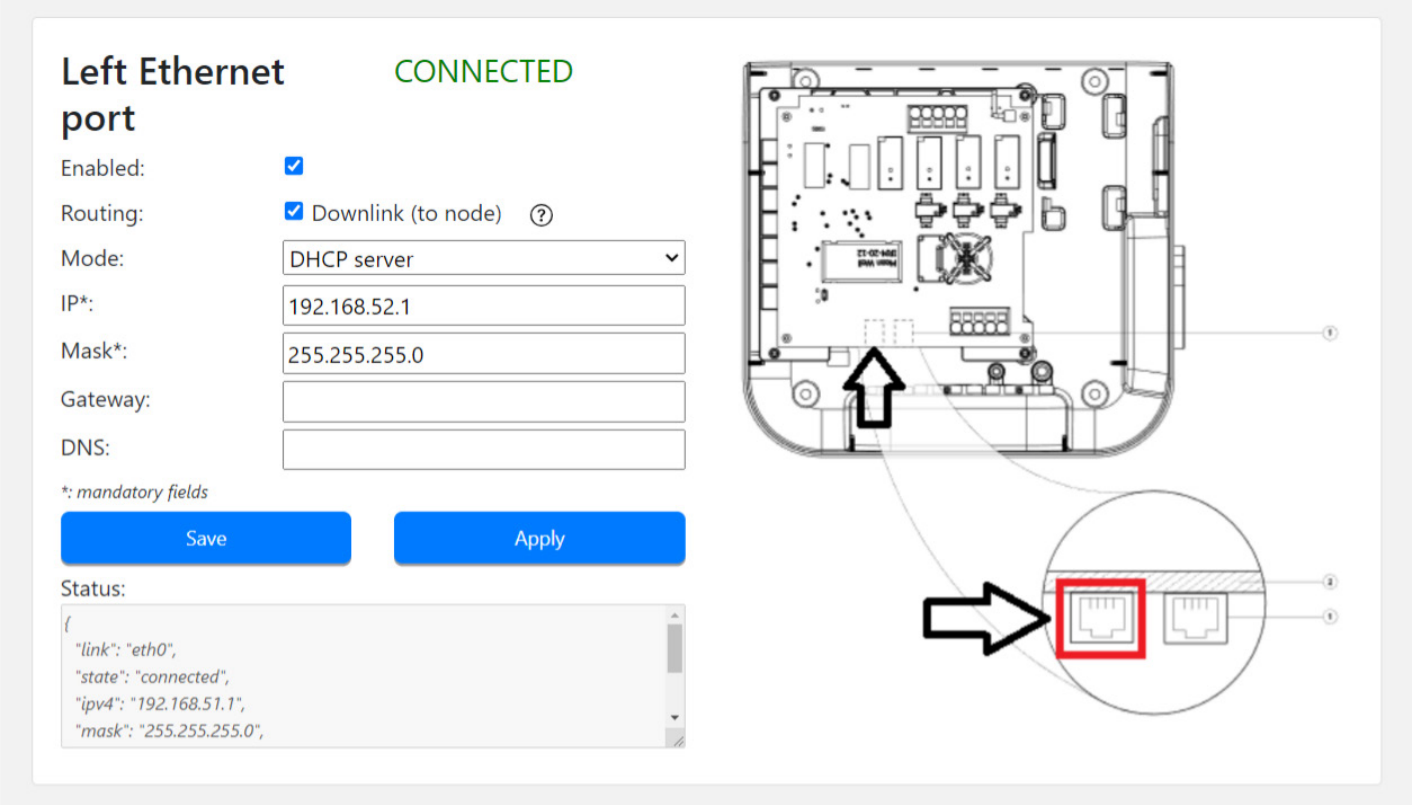

8.4.3.2 Network connection settings: Node

EV chargers configured as Nodes are daisy-chained to the Master and each other, forming an Ethernet network. The two Ethernet ports on the EV charger are chained together and act as one entity. To enable Ethernet chaining, proceed according to the following steps:

Step 1. On the configuration page, go to the “Ethernet chaining” section and check the “Chain Left and Right Ethernet ports” checkbox (Figure 62).

Figure 63. Ethernet ports chaining

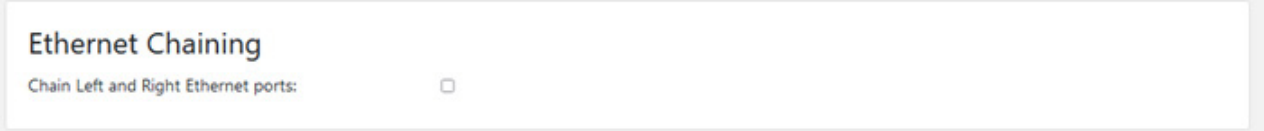

Step 2. Go to the “Chained Ethernet” section.

Step 3. Make sure the “Enabled” checkbox is checked.

Step 4. Set “Mode” to “DHCP client”

Step 5. Click “Save” and “Apply.”

Figure 64. Chained Ethernet connection settings

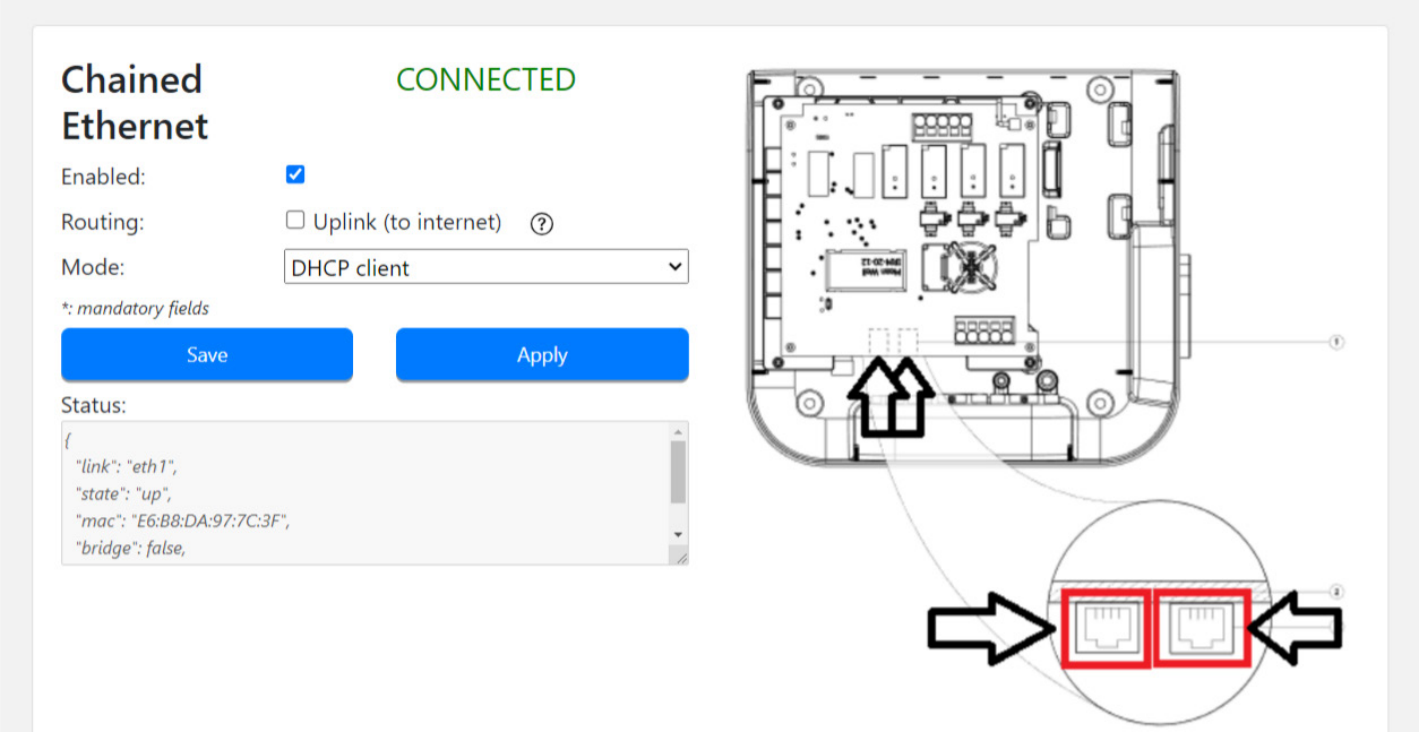

8.4.4 Configuration 4: Master connected to the internet via Ethernet switch, Nodes connected to Master and each other in daisy-chain topology using RJ45 cable.

The maximum number of connected EV chargers in this configuration is 50. When creating a daisy-chain network using RJ45 cable, it is important to consider the locations of the Ethernet ports on the EV charger:

- ETH0 (left port) of the Master should be connected to theETH1 (right port) of Node 1.
- ETH0 (left port) of Node 1 should be connected to the ETH1 (right port) of Node 2.
- ETH0 (left port) of Node (n-1) should be connected to the ETH1 (right port) of Node (n).

Figure 65. Network diagram: Master connected via Ethernet, Nodes connected to Master and each other

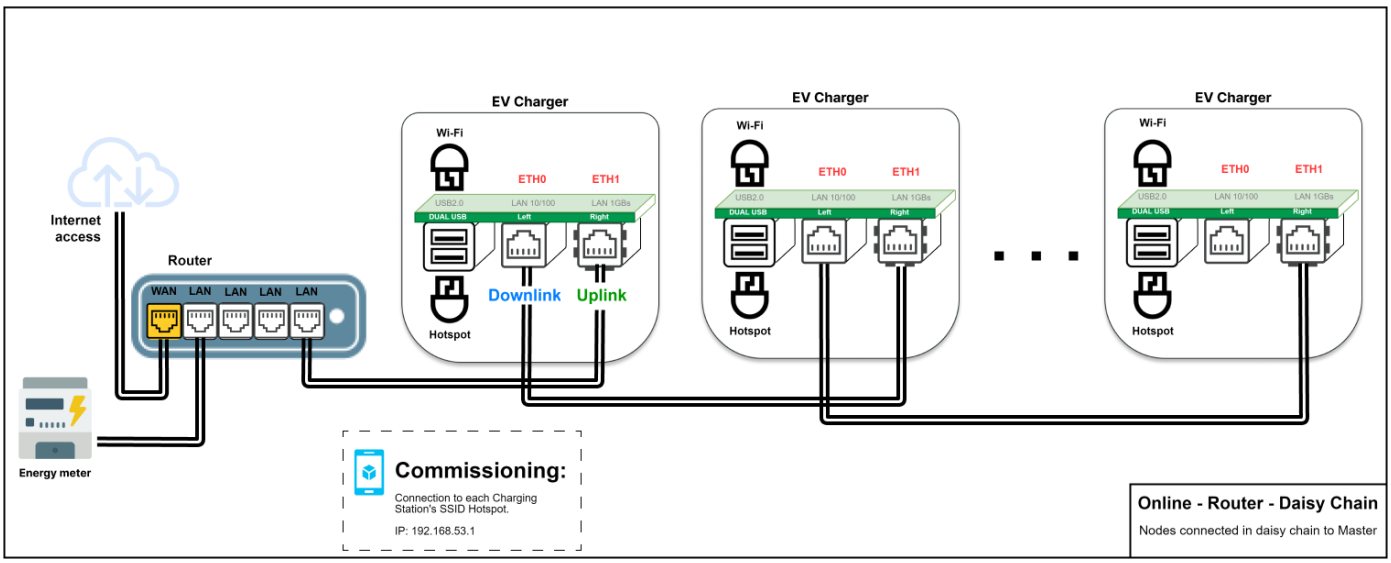

If an EV charger acting as a Node fails in this network configuration, all Nodes that are connected to the right of the chain from the point of failure will be unable to communicate with the Master and will be unavailable.

8.4.4.1 Network connection settings: Master

Configuring the Master EV Charger includes setting up ETH0 and ETH1 port parameters. A qualified person performing the installation should have a good understanding of IP network installation and commissioning.

To configure the Master EV charger, select the advanced configuration first (refer to Section 8.3.3.1 for details).

Steps to configure Ethernet (ETH1) connection settings:

Step 1. Go to the “Right Ethernet port” section (Figure 65).

Step 2. Make sure the “Enabled” checkbox is checked.

Step 3. In the “Routing” field, select “Uplink (to internet)”.

Step 4. “Mode” to “DHCP client”.

Step 5. Click “Save” and “Apply.”

Figure 66. Ethernet (ETH1) connection settings for the Master EV Charger

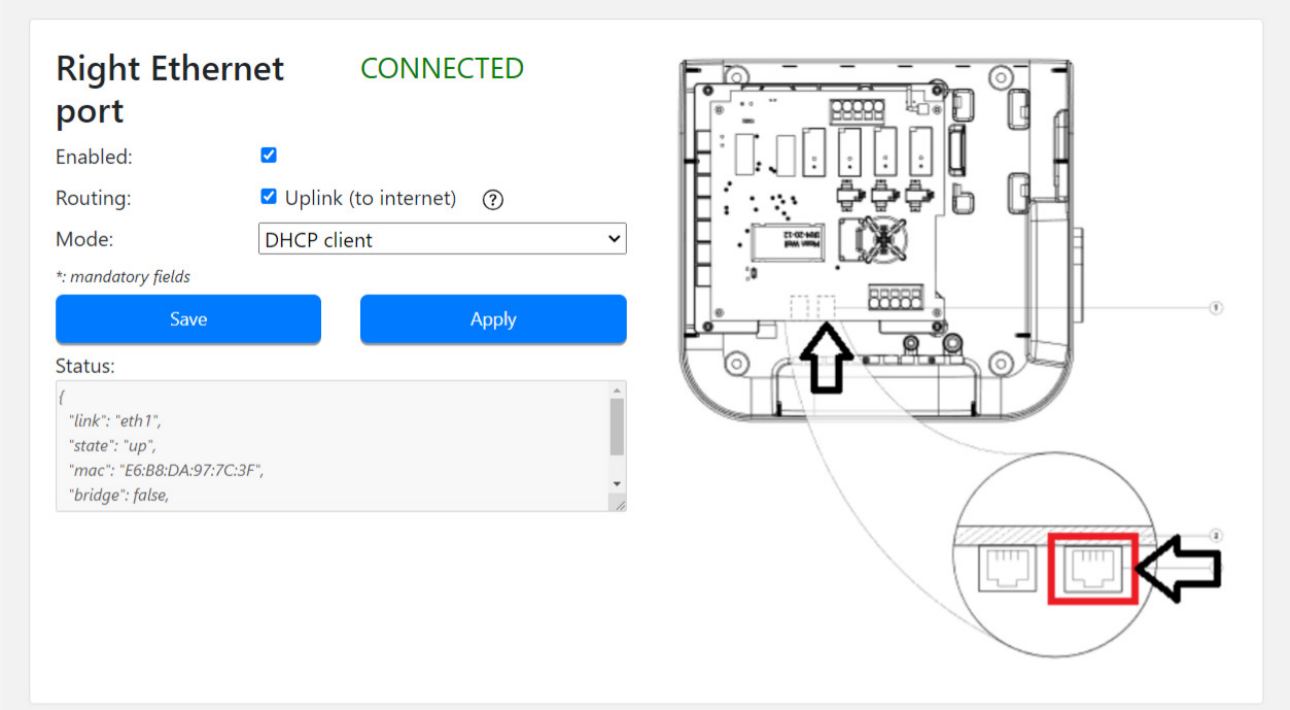

Steps to configure Ethernet (ETH0) connection settings:

Step 1. Go to the “Left Ethernet port” section (Figure 66)

Step 2. Make sure the “Enabled” checkbox is checked.

Step 3. In the “Routing” field, select “Downlink (to node)”.

Step 4. Set “Mode” to “DHCP server”.

Step 5. Add details relevant to the LAN (IP address, Mask...)

Step 6. Click “Save” and “Apply.”

Figure 67. Ethernet (ETH0) connection settings for the Master EV Charger

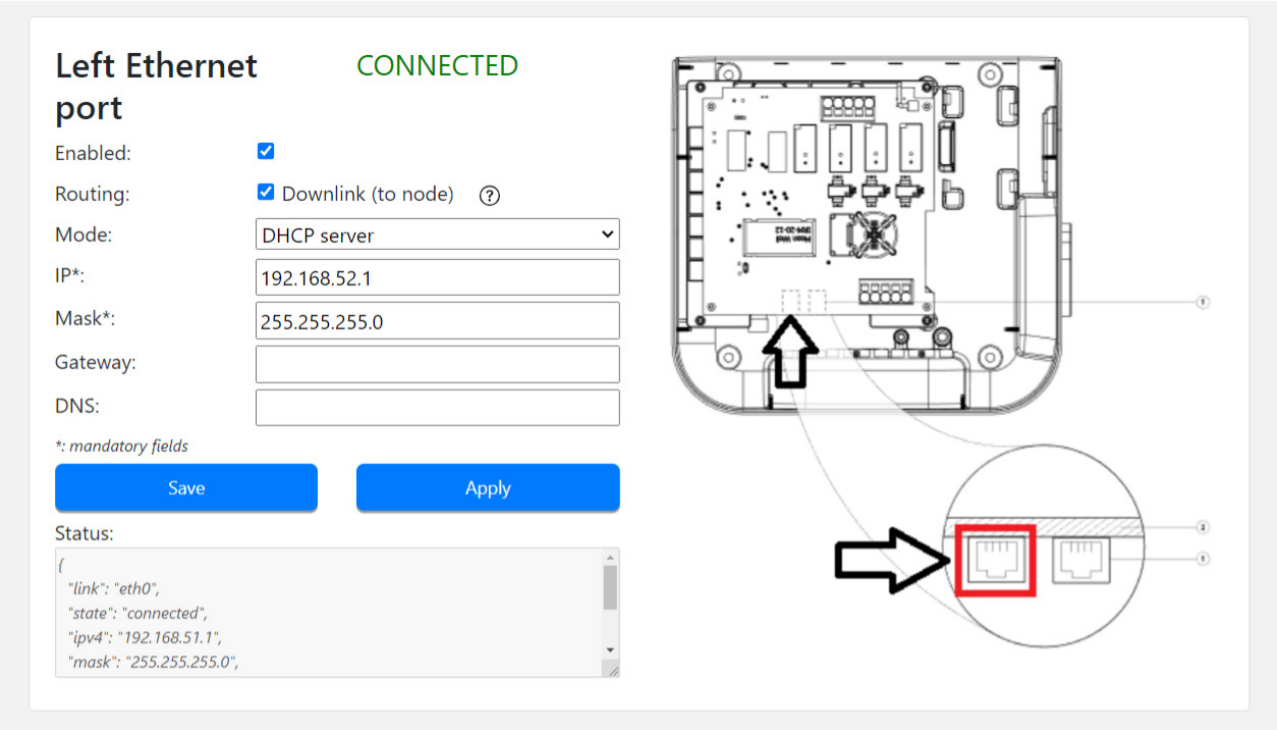

8.4.4.2 Network connection settings: Node

To connect the Nodes and Master in a daisy-chain network topology, refer to Section 8.4.3.2.

8.4.5 Configuration 5: Master connected to the internet via 4G LTE, Nodes connected to Master and each other in daisy-chain topology using RJ45 cable.

The maximum number of connected EV chargers in this configuration is 15. The installer is responsible to ensure sufficient signal strength, coverage, and data availability of the 4G LTE network.

When creating a daisy-chain network using RJ45 cable, it is important to consider the locations of the Ethernet ports on the EV charger:

- ETH0 (left port) of the Master should be connected to the ETH1 (right port) of Node 1.
- ETH0 (left port) of Node 1 should be connected to the ETH1 (right port) of Node 2.
- ETH0 (left port) of Node (n-1) should be connected to the ETH1 (right port) of Node (n).

Figure 68. Network diagram: Master connected via 4G LTE, Nodes connected to Master and each other

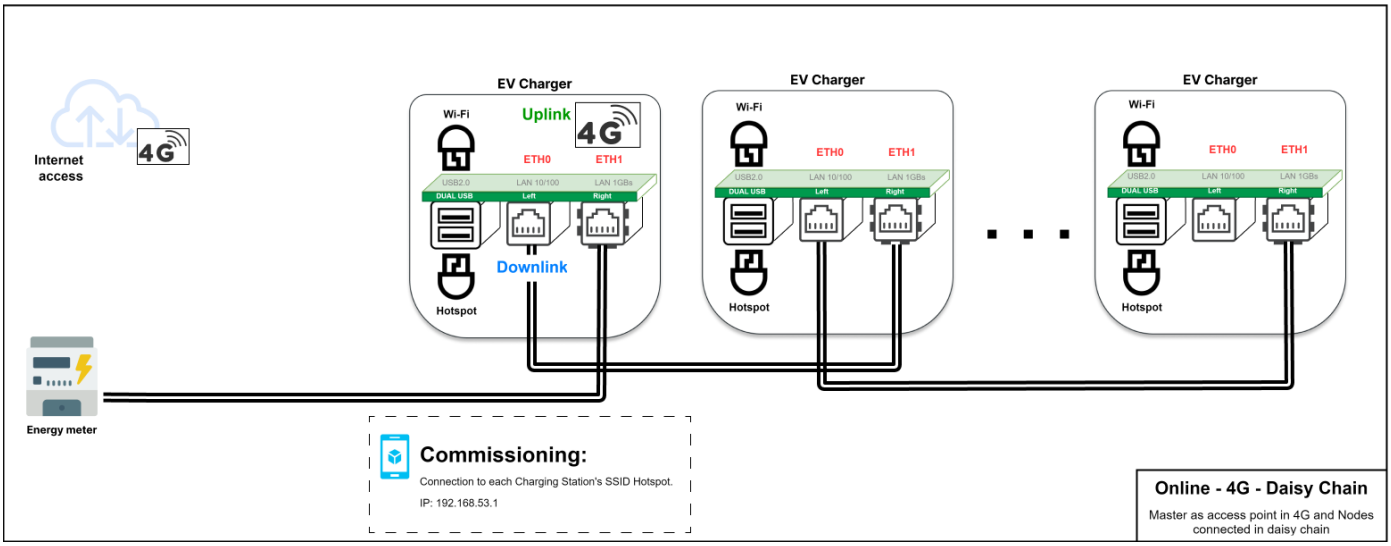

8.4.5.1 Network connection settings: Master

Configuring the Master EV Charger includes setting up ETH0 and ETH1 port parameters. A qualified person performing the installation should have a good understanding of IP network installation and commissioning.

To configure the Master EV charger, select the advanced configuration first (refer to Section 8.3.3.1 for details).

Steps to configure the energy meter connected via the Ethernet (ETH1) port:

Step 1. Go to the “Right Ethernet port” section (Figure 68).

Step 2. Make sure the “Enabled” checkbox is checked.

Step 3. In the “Routing” field, keep the box unticked.

Step 4. Set “Mode” to “Fixed address” or ‘DHCP server’.

Step 5. Enter connection parameters for the energy meter.

Step 6. Click “Save” and “Apply.”

Figure 69. Ethernet (ETH1) connection settings for the Master EV charger

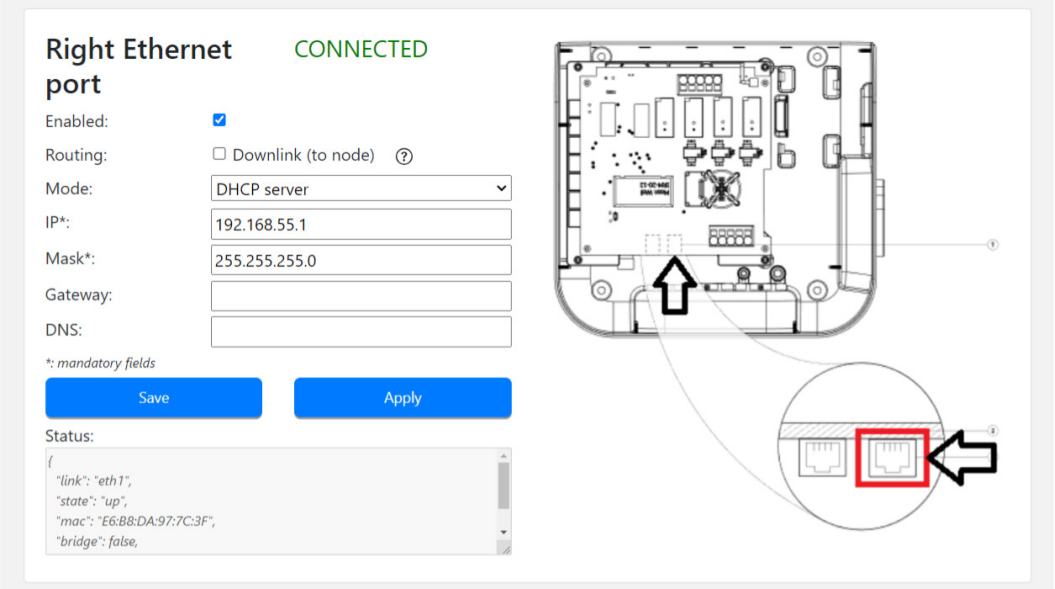

Steps to configure Ethernet (ETH0) connection settings:

Step 1. Go to the “Left Ethernet port” section (Figure 69)

Step 2. Make sure the “Enabled” checkbox is checked.

Step 3. In the “Routing” field, select "Downlink (to node)".

Step 4. Set “Mode” to “DHCP server”.

Step 5. Add details relevant to the LAN (IP address, Mask...)

Step 6. Click “Save” and “Apply.”

Figure 70. Ethernet (ETH0) connection settings for the Master EV Charger

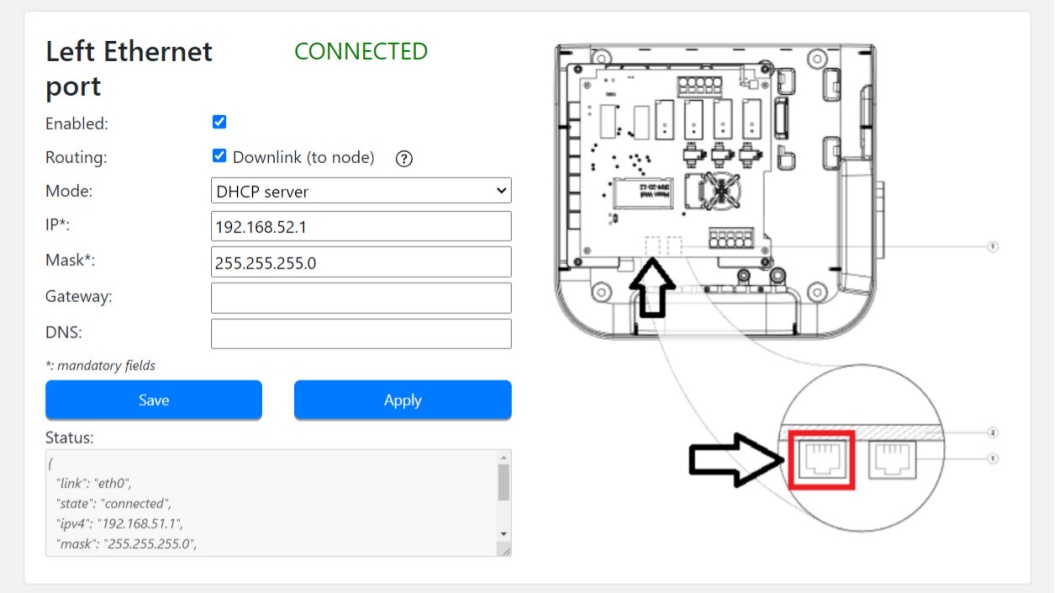

Steps to configure 4G LTE connection settings:

Step 1. Go to the “4G / Cellular” section (Figure 71).

Step 2. Make sure the “Enabled” checkbox is checked.

Step 3. In the “Routing” field, select "Uplink (To internet)".

Step 4. In the “Provider” field, select your SIM card provider from the drop-down menu.

Step 5. Click “Save” and “Apply.”

This section is available only for the products that support 4G LTE.

Green Motion Building EV chargers are preconfigured with the SIM card settings for the following mobile network operators:

- Hologram
- Swisscom M2M
- Vodafone

Figure 71. 4G LTE connection settings for the Master EV Charger using a predefined SIM card provider

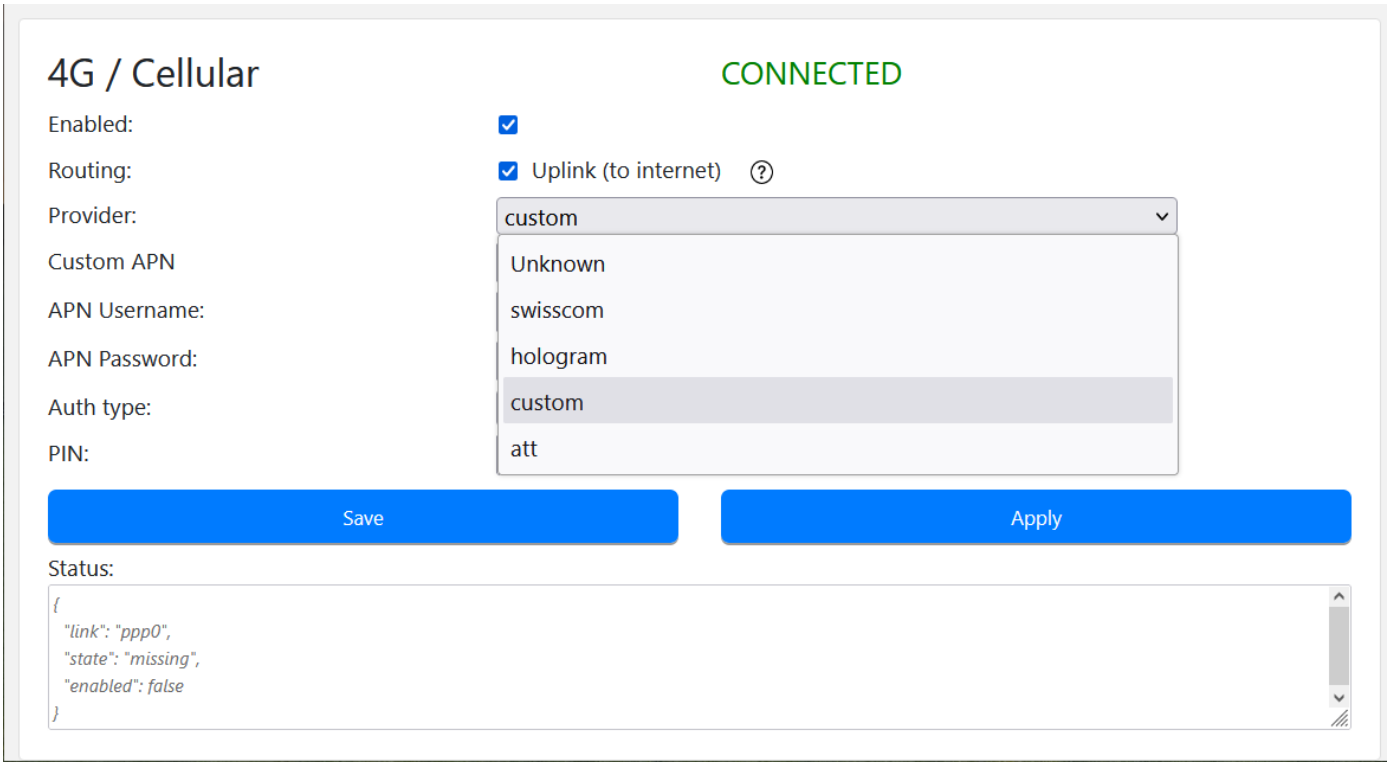

In case the SIM card from another mobile network operator is used, select "custom" from the Provider drop-down menu and fill the parameters provided by the SIM card provider:

- APN link
- APN Username
- APN Password

Figure 72. 4G LTE connection settings for the Master EV Charger using a custom SIM card provider

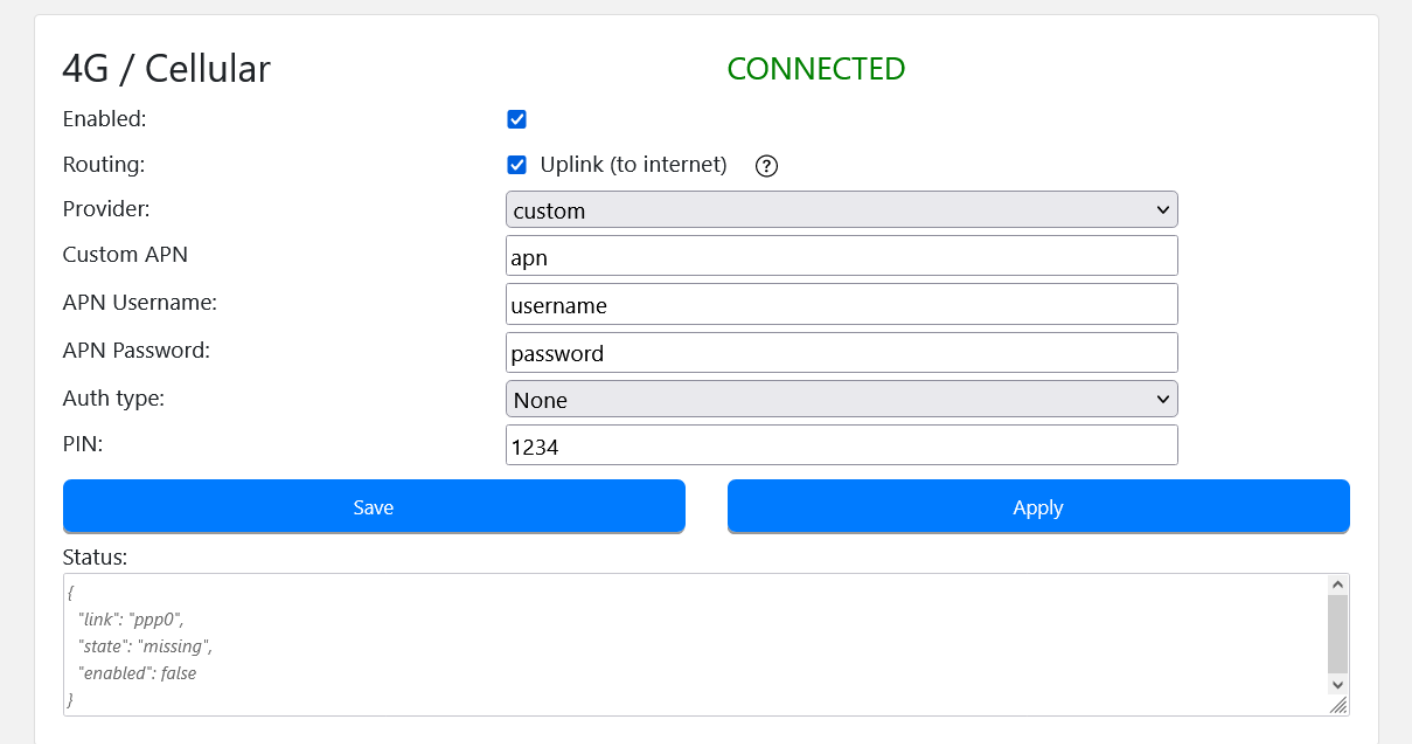

Refer to Section 6.8 for technical specifications of the supported SIM cards.

8.4.5.2 Network connection settings: Node

To connect the Nodes and Master in a daisy-chain network topology, refer to Section 8.4.3.2.

8.4.6 Configuration 6: Master connected to the internet via 4G LTE, Nodes connected to the Master and each other via Wi-Fi, with Master acting as Wi-Fi hotspot

The maximum number of connected EV chargers in this configuration is 5. The installer is responsible to ensure sufficient signal strength, coverage, and data availability of the 4G LTE network.

This configuration is not recommended in offline mode.

Figure 73. Network diagram: Master connected via 4G LTE, Nodes connected to Master via Wi-Fi

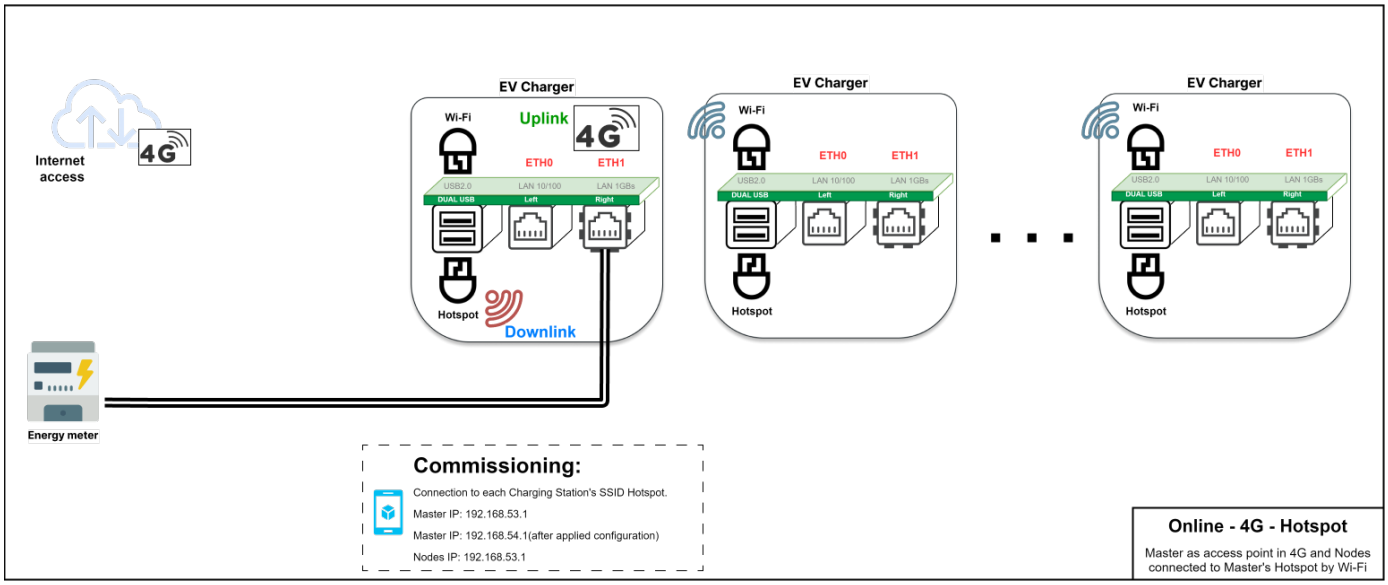

8.4.6.1 Network connection settings: Master

Configuring the Master EV Charger includes setting up 4G LTE, Wi-Fi hotspot, and ETH1 port parameters. A qualified person performing the installation should have a good understanding of IP network installation and commissioning.

To configure the Master EV charger, select the advanced configuration first (refer to Section 8.4.3.1 for details).

Steps to configure 4G LTE connection settings:

To configure the Master EV charger to connect to the internet via 4G LTE, refer to Section 8.4.5.1 and follow the 4G LTE configuration steps.

Steps to configure Wi-Fi hotspot:

Step 1. Go to the “Wi-Fi Hotspot” section (Figure 74).

Step 2. Make sure the “Enabled” checkbox is checked.

Step 3. In the “Routing” field, select "Downlink (to node)"

Step 4. Set “Mode” to “DHCP server.”

Step 5. Select the SSID, password, and security protocol to be used by the Master Wi-Fi network.

Step 6. Set the network details (IP, Mask, Gateway, DNS)

Step 7. Click “Save” and “Apply.”

You may reopen the configuration page and continue with the configuration on the Master EV charger using the IP address defined in the steps above. Figure 73 illustrates using the IP address 192.168.54.1 as an example.

Devices attempting to connect to the SSID of the Master Wi-Fi network must use the same password and security protocol to establish a connection.

Figure 74. Wi-Fi Hotspot settings for the Master EV charger

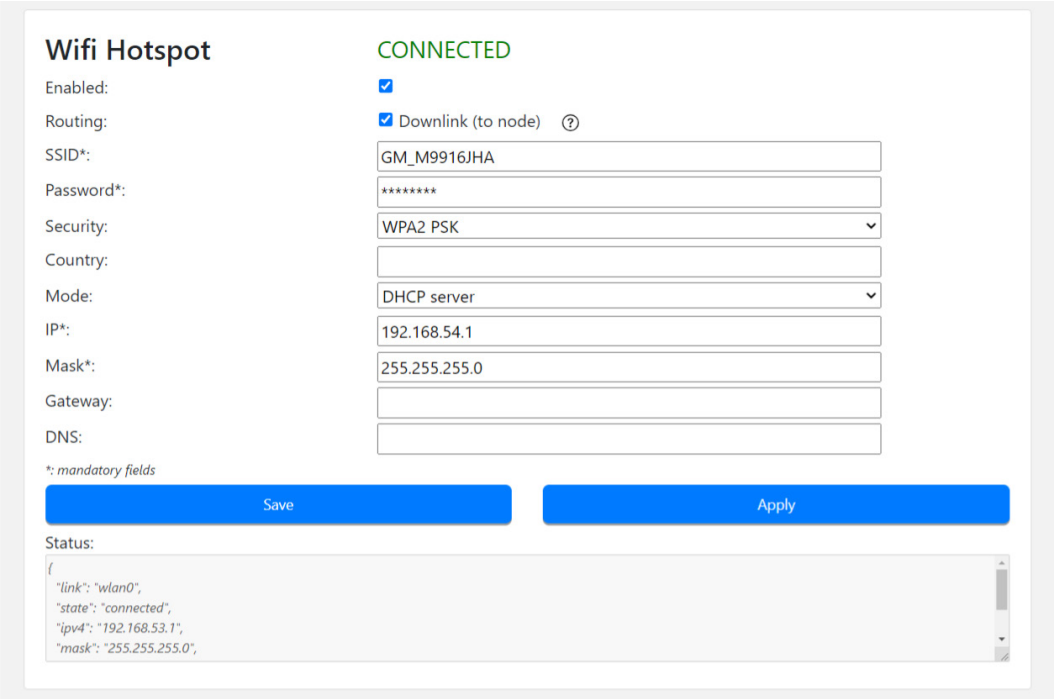

8.4.6.2 Network connection settings: Node

To configure Node EV chargers to connect to the Master Wi-Fi network, refer to Section 8.4.2.1.

8.4.7 Configuration 7: All EV chargers in daisy-chain to router

All EV chargers connected to the internet via Ethernet router in daisy-chain topology using RJ45 cable as part of the existing network infrastructure.

This is the configuration recommended if you are using Eaton Building Energy Management Software.

The maximum number of connected EV chargers in this configuration is 50. In this configuration there is not a subnetwork managed by the Master. All the EV chargers are part of the existing network infrastructure and range of IP. When creating a daisy-chain network using RJ45 cable, it is important to consider the locations of the Ethernet ports on the EV charger:

- ETH0 (left port) of the Master should be connected to the ETH1 (right port) of Node 1.
- ETH0 (left port) of Node 1 should be connected to the ETH1 (right port) of Node 2.
- ETH0 (left port) of Node (n-1) should be connected to the ETH1 (right port) of Node (n).

Figure 75. Network diagram: All EV chargers connected via Ethernet router in daisy-chain in a bridge configuration.

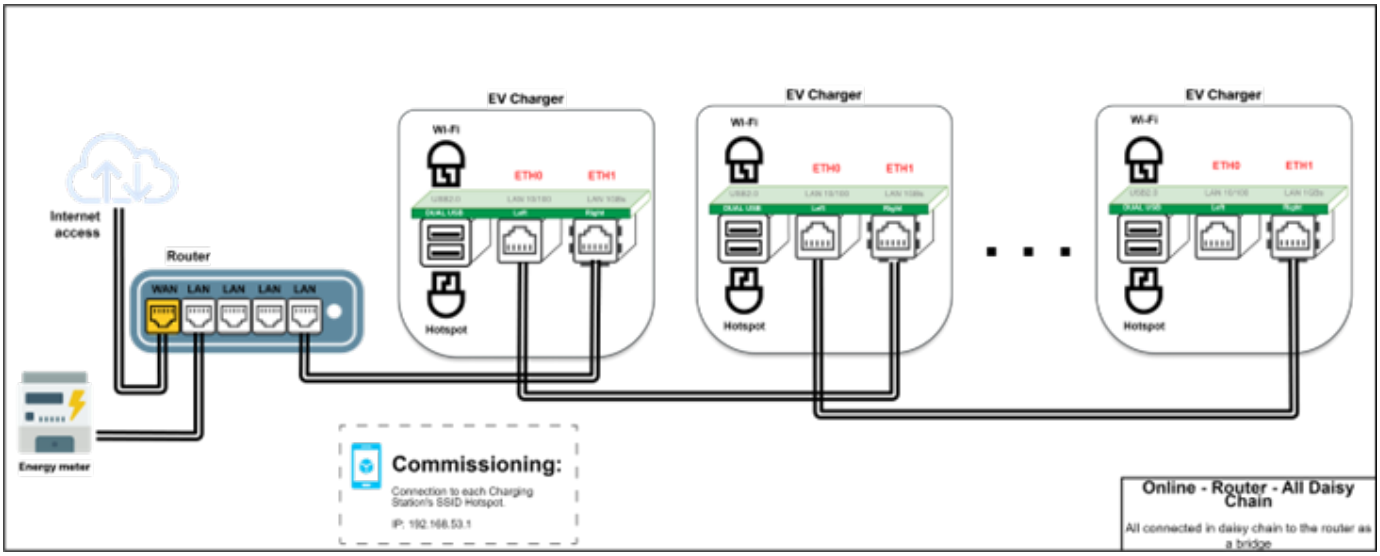

If an EV charger acting as a Node fails in this network configuration, all Nodes that are connected to the right of the chain from the point of failure will be unable to communicate with the Master and will be unavailable.

Recommended configuration to work with Eaton's BEMS or any other configuration that requires to have all the EV chargers in the same network as the existing network infrastructure.

This configuration only works if the ethernet router can provide a DHCP and DNS servers.

8.4.7.1 Network connection settings

Configuring the Master and Nodes includes setting up ETH0 and ETH1 port parameters as a bridge. A qualified person performing the installation should have a good understanding of IP network installation and commissioning.

To configure the Master and Node, select the advanced configuration first (refer to Section 8.4.3.2 for details).

Set up all the EV Chargers in a daisy-chain network topology, refer to Section 8.4.3.2.

8.5 Port usage

Table 30. External

Port	Protocol	Usage
20,21	FTP	Used for File transfer Firmware update/Get Diagnostic
22	SFTP	Used for File transfer Firmware update/Get Diagnostic
53	DNS	The Domain Name System (DNS) is a hierarchical and distributed naming system for computers, services, and other resources in the Internet or other Internet Protocol (IP) networks
80	HTTP	Used for File transfer Firmware update/Get Diagnostic
83	mit-ml-dev (MIT ML Device	Server port used by Boxproxy protocol
123	NTP	Used for time synchronization
443	HTTPS	Websocket connection
502	Modbus	Connection with external energy meter (EM) or energy meter system (EMS)
8082	HTTP/HTTPS	Configuration page for the charging station
2535	UDP	Used for broadcasting master information (only open in load balancing master mode)

9 Operation

Professional and qualified personnel must be experts in the field and are therefore responsible for commissioning the system in accordance with the manufacturer's instructions and local legislations.

Please visit the link or scan the QR code to fill out the installation checklist form at:
https://content.eaton.com/en-gb-installation-checklist-ev-chargers

Figure 76. Installation checklist online form QR code

9.1 Switching on the Green Motion Building EV charger

Before switching on the EV charger, check the effectiveness of the safety measure(s) of the system in accordance with the local regulations.

Electrical systems or devices must be checked by professional and qualified personnel before commissioning and switching on the unit.

Before switching on the unit, please perform the checks below:

Step 1. Check that the equipment is correctly fixed to the wall or to the floor in accordance with local regulations.

Step 2. Check that the AC grid connections have been made correctly in accordance with local regulations.

Step 3. Perform checks on the continuity of the connections of the protective conductor, insulation resistance, RCD triggering current, triggering time, etc., in accordance with local regulations.

Step 4. Verify that the connection cover is closed and secured with the fixing screws.

If the checks listed above were satisfactory, proceed as follows:

Step 1. Turn on the AC grid circuit breakers.

Step 2. Wait for the LED light to come on.

9.2 LED indicator

The list below summarizes the possible LED indications and their significance during the operation of the Green Motion Building EV charger.

Figure 77. LED indicator of the Green Motion Building EV charger

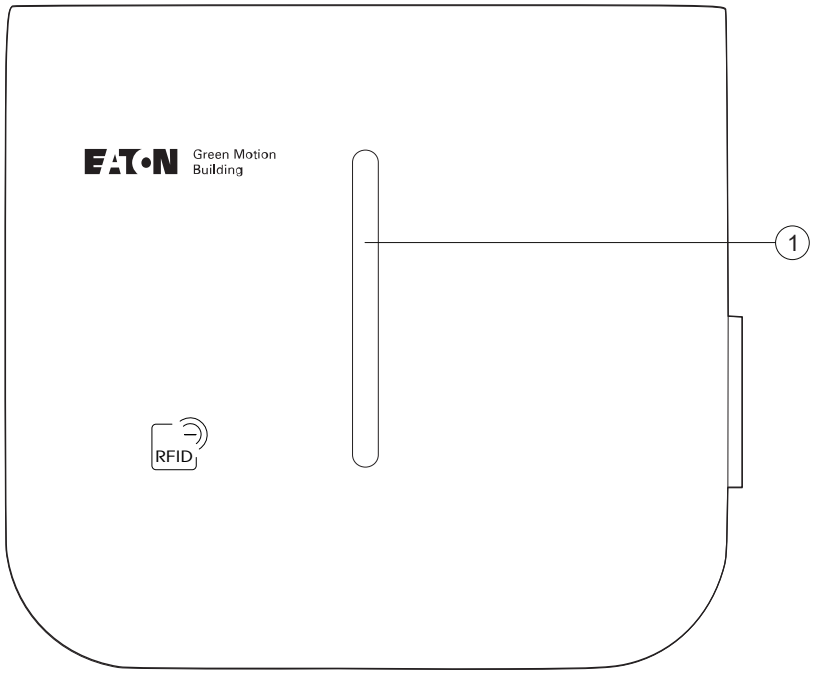

Tag	Description
1	LED indicator

Table 31. LED indicator

LED Color	LED state	Description
	No light	Stopped or not powered
	Green lift up Flashing green Steady green Breathing green	Integrity check Start-up stage Ready for use Waiting for user interaction
	Steady white + flashing red dot	No internet / No server or local connection
	Flashing blue Blue lift up Steady blue	Charge start-up stage Vehicle in charge Vehicle charged / Reserved
	Steady Cyan	No power available / Limit set
	Steady yellow	Not in service / Maintenance
	Breathing orange	Updating stage
	Steady red	Error in charging / Hardware fault / Unauthorized RFID card
	No light + flashing red	Integrity check failed
	Flashing purple / white	RFID add card / Master card detected
	Purple lift up	RFID new card added
	Purple lift down	RFID card removed

9.3 Removing the plug

To remove the plug from the holder you need to pull it first vertically then horizontally. See Figure 77.

Figure 78. Removing the plug from the Green Motion Building EV charger

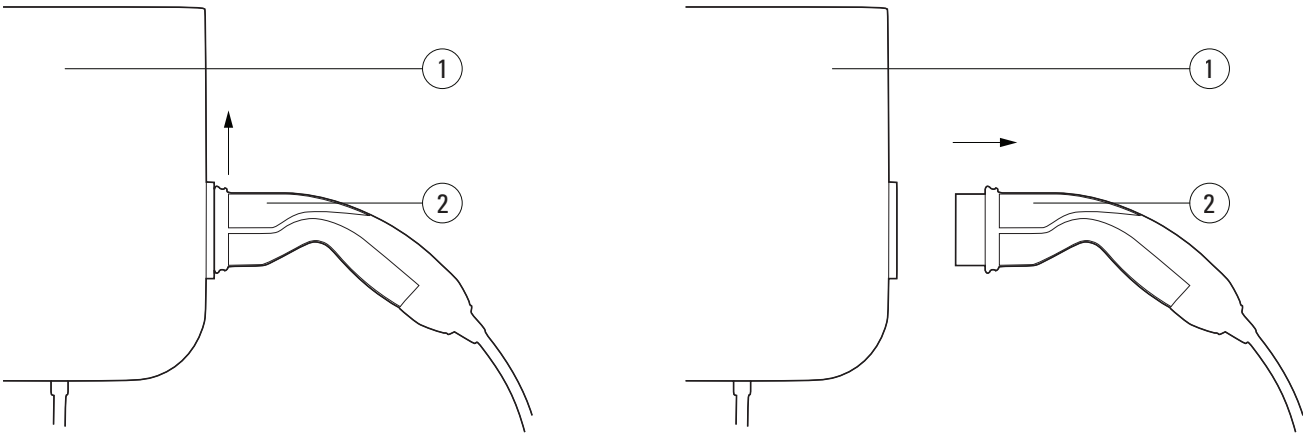

Tag	Description
1	Green Motion Building EV charger
2	Type 2 connector

10. Maintenance



Installation, commissioning, maintenance or retrofitting of the EV charger must be performed by professional and qualified personnel, who are responsible for complying with existing standards and local installation regulations.



Before starting connection operations, ensure that the external AC-line main switch is disconnected, and circuit breakers are open.



Any operation requiring the main converter box to be opened can lead to electric shock hazards.

The opening of the EV charger as well as any configuration changes must be carried out by professional and qualified personnel in accordance with the local safety and electrical regulations and laws.



Wait at least 10 minutes before removing the Green Motion Building EV charger. The enclosure could overheat during its operation or be heated by direct sunlight. To avoid burns from an overheated surface caused by sunlight, please use suitable PPE or wait for the equipment to cool down before accessing it.



Green Motion Building EV chargers are equipped with tamper detection functionality. In case the EV charger is opened while powered on, a notification will be sent to the backend server. The EV charger will also prevent the connected EV from charging.

10.1 Uninstall



Before starting any maintenance operations, make sure that the charging cable is not connected to the vehicle, that the external AC-line main switch is turned off, and that the circuit breakers are open.

Wait at least 10 minutes before removing the Green Motion Building EV charger.

The enclosure could overheat during its operation, or be heated by direct sunlight, and it can cause burns on contact. To avoid burns from an overheated surface caused by sunlight, please use suitable PPE or wait for the equipment to cool down before accessing it.

To uninstall the unit:



Step 1. Disconnect any load.

Step 2. Open the housing by removing the fixing screws.

Step 3. Perform a factory reset on the charger.

Step 4. Disconnect the AC grid connectors.

Step 5. Unscrew the mounting screws.

Step 6. Close the front cover to avoid any injuries from sharp edges.

The “Firmware Update” section allows to upload a firmware package to update the EV charger from the Configuration page.

10.2 Firmware updates



It is mandatory to install and maintain the unit with the latest system update to enable new features and bug fixes. After discussion with legal, please remove this sentence. For information related to available system updates refer to the product website or contact Eaton technical support representative by email: BGTechSupport@eaton.com



- In scenarios where Green Motion Building EV chargers are connected in a master-node network, it is strongly recommended to upgrade the firmware of the EV charger configured as the Master first, followed by upgrading the firmware of the EV chargers configured as Nodes.
- EV charger will not perform an upgrade while an active charging session is in progress.
- EV charger will not be available for charging when an upgrade is in progress.

10.3 Factory reset

The Green Motion Building EV charger provides the ability to restore its configuration to the factory default state. This can be used to erase logs from the EV charger's memory when decommissioning the unit or reconfiguring the network.

Steps to perform a reset to factory defaults:

10.3.1 Through the commissioning page

Step 1. Power cycle the EV charger (turn it off, then on) using the circuit breaker.

Step 2. Enable Wi-Fi on your phone, computer, or tablet.

Step 3. Connect to the Wi-Fi hotspot of the EV charger.

Step 4. Open the commissioning page. Refer to section 8.1 for details.

Step 5. In the "Configuration" drop-down menu, select the "Advanced" option.

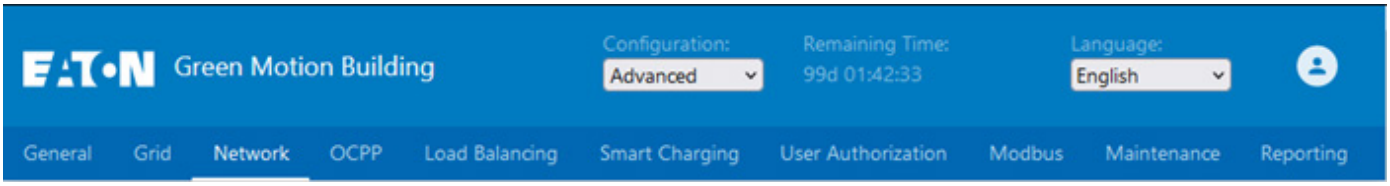

Step 6. Go to the Maintenance tab. Find the Factory Reset section.

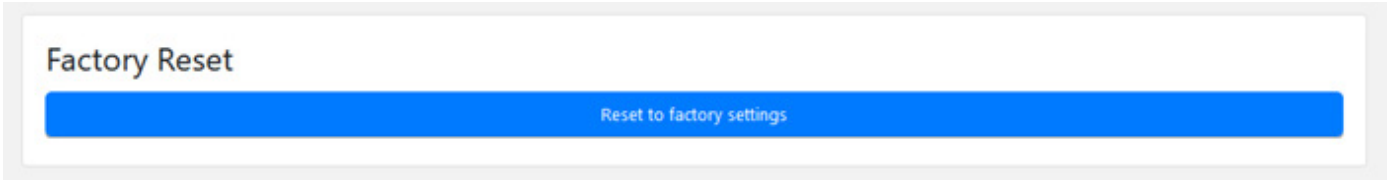

Step 7. Click on "Reset to factory settings."

Step 8. Confirm your choice in the pop-up window at the top of the page.

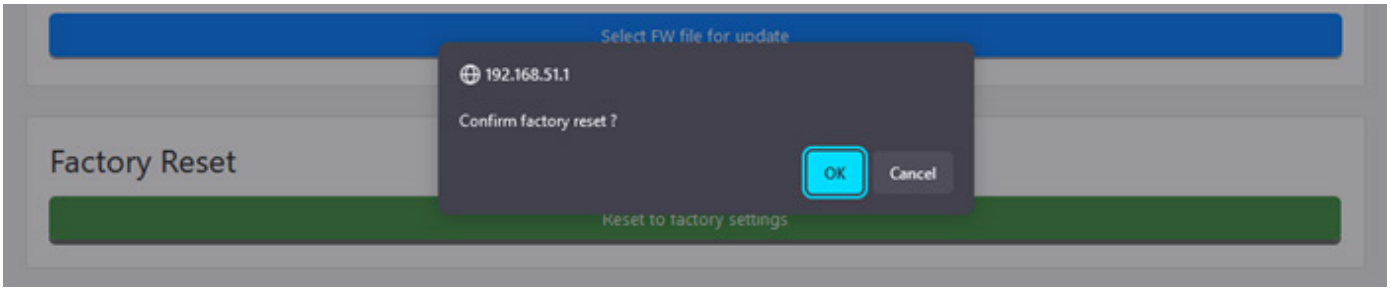

Step 9. EV charger will undergo a power cycle, and the configuration will be restored to its factory default state.

Green Motion Building EV Charger provides an alternative method to perform factory reset of the device in case the user is unable to access the configuration page for any reason. This method is not recommended and should only be used if absolutely necessary.

10.3.2 Through Factory Reset button

Because the unit will be opened in the powered state to perform the factory reset, only qualified personnel (trained according to IEC 60050-826:2004, 826-18-01), using appropriate personal protective equipment (PPE) may perform the operation.

Steps to perform the factory reset:

Step 1. Power off the unit. Disconnect any load.

Step 2. Wait at least 10 minutes for the unit to cool down.

Step 3. Open the housing by removing the fixing screws. Refer to Section 5.2 for details.

Step 4. Remove the front cover safely. Do not remove any wiring.

Step 5. Locate the push button on the LED board (see Figure 15).

Step 6. Power on the unit.

Step 7. Wait for the LED indicator on the unit to turn green.

Step 8. Press and hold the Factory Reset button for 10 seconds until the charger reboots.

Step 9. Power off the unit.

Step 10. Close the front cover.

10.4 Disposal

When disposing of the EV charger, the end user should contact professional and qualified personnel for disposal instructions. Please refer to www.eaton.com for further details.

The EU Directive on Waste Electrical and Electronic Equipment (WEEE) (Directive 2012/19/EU) establishes common rules on the management of electrical and electronic equipment to minimize its impact – from design until disposal – on the environment. As a manufacturer of electrical and electronic equipment, Eaton actively supports the requirements of the WEEE Directive.

In compliance with the EU standard EN 50419 for marking of electrical and electronic equipment, we include the crossed-out wheeled bin symbol on our products. This symbol alerts users that these products should be recycled in accordance with local environmental regulations and not discarded with household waste.

When end users recycle WEEE they are helping to ensure that these products are neither incinerated nor sent to landfill, minimizing the potential negative impact on human health and the environment.

Any device that is no longer needed must therefore be returned to the distributor or disposed to an authorized collection point or recycling center in the area. Eaton encourages all its customers and end users to make responsible decisions when it comes to disposing products.

Eaton is not responsible for the transportation of the device to the collection point or recycling center.

11. Troubleshooting

This section contains information and procedures for solving possible problems that may occur with the Green Motion Building EV charger.

If the problem persists, contact your Eaton technical support representative using the email address BGTechSupport@eaton.com.

Table 32. Troubleshooting

Possible problems	Solutions
The EV charger is unresponsive; nothing happens when connecting it to a vehicle.	Check that the EV charger is correctly connected to a power supply. The LED indicator should be solid green.
The EV charger LED indicator is solid red.	There is an error or fault preventing a charging session to either start or resume. Attempt to reinitiate the charging session by unplugging the charging cable from the vehicle and reinserting it. If the problem persists, check any control messages displayed in the vehicle.
The EV charger LED indicator is green, but the vehicle does not charge.	Check that the charging cable connector is adequately plugged into the vehicle. When charging with a Type 2 connector, ensure that it is pushed in until an audible click is heard. Some vehicles need to be locked before a charging session is allowed to start. Try locking the vehicle. Visually inspect the condition of the cable used for charging, its connector and sockets, the vehicle socket as well as the EV charger socket if using a Green Motion Building EV charger with a Type 2 socket. Stop usage immediately if you see physical damage to any of these parts. Check that the vehicle does not have scheduled/delayed charging set up. In such cases it will only charge at certain hours of the day.
The charging cable connector will not release from the vehicle or the EV charger.	In most cases the charging cable must first be released/unlocked by the vehicle to prevent injuries, accidental disconnection and misuse. Try unlocking the vehicle first. Alternatively, refer to the vehicle instruction manual.
The plug does not release.	Due to the weight of the 22 kW connector cable, it is possible that the latch on your vehicle will not release. In this case, firmly hold the plug slightly upwards as you disconnect the plug from the vehicle.

12. Technical data

12.1 Rating plate

To locate the rating plate on the equipment, refer to Figure 79.

The technical specifications shown in this manual do not replace those that appear on the rating plate attached to the equipment.

The labels attached to the equipment must NEVER be removed, damaged, soiled or hidden for any reason. The labels must NOT be hidden by foreign objects (rags, boxes, equipment, etc.).

They must be cleaned periodically and always kept clearly visible.

Information reported on the rating plate:

1. Manufacturer
2. Model
3. Serial number
4. Ratings
5. Warnings and usage instructions.

Figure 79. Location of the rating plate on the bottom of the Green Motion Building EV charger

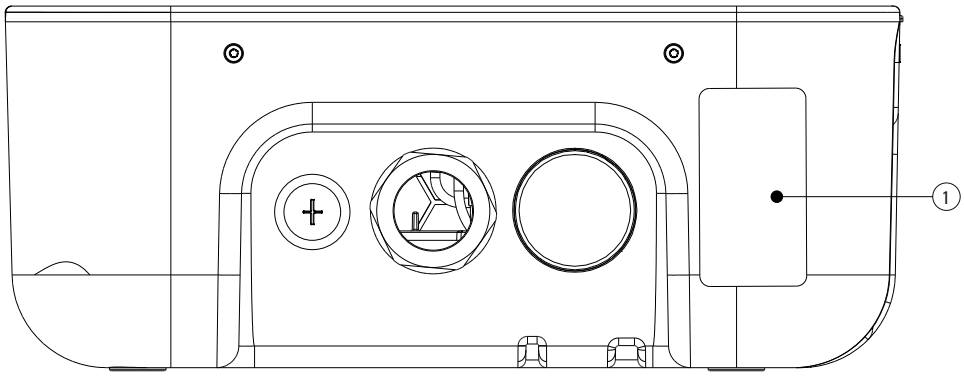

Tag	Description
1	Rating plate

Figure 80. Example of the Green Motion Building EV charger rating plate

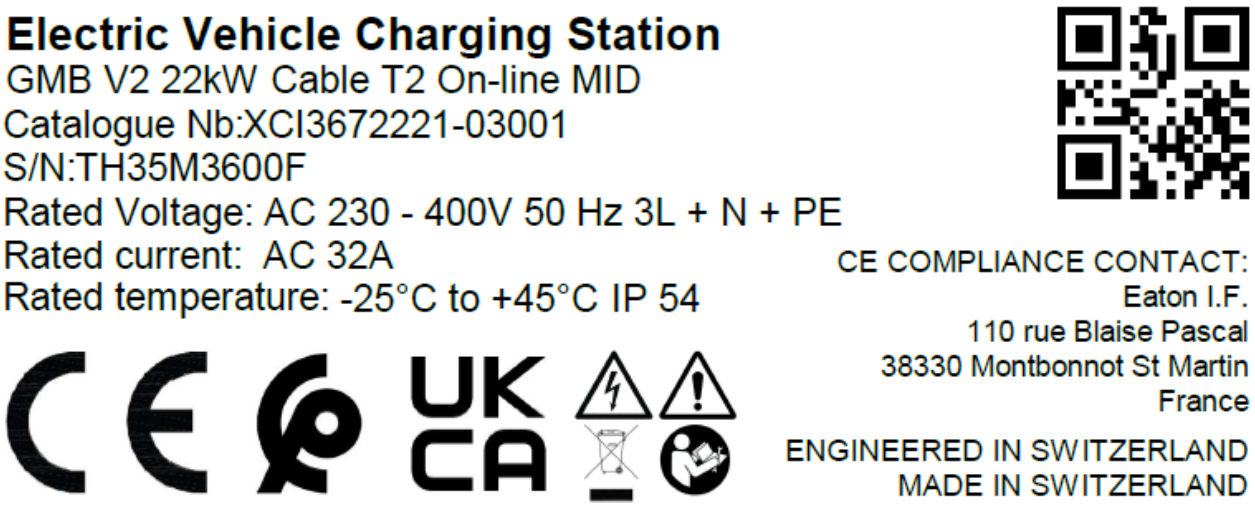

12.2 Technical datasheet

The latest version of the technical datasheet for the Green Motion Building EV charger as well as its CE Certification document are available for download on www.eaton.com.

Table 33. List of standards Green Motion Building EV charger complies with

Certifications and standards	
Product Safety	Mode 3 in accordance with EN/IEC 61851-1 AC charging
Cable	Type 2 cable: up to 32 A/400 V AC in accordance with EN/IEC 62196-1 and EN/IEC 62196-2
Electromagnetic compatibility	EN 61851-21-2, EN 61000-6-1, EN 61000-3-3, EN 61000-3-11, EN 61000-3-12

13. Product guarantee and technical support

Should any technical problems arise during the warranty period of the Green Motion Building EV charger, contact your local installer or your Eaton technical support representative for assistance using the email address BGTechSupport@eaton.com.

The following information should be provided when contacting the Eaton technical support representative:

- Product model and serial number

Notes

Eaton
EMEA Headquarters
Route de la Longeraie 7
1110 Morges, Switzerland
Eaton.com/greenmotionbuilding

© 2026 Eaton
All Rights Reserved
Publication No. MN191028EN
March 2026

Changes to the products, to the information contained in this document, and to prices are reserved; so are errors and omissions. Only order confirmations and technical documentation by Eaton is binding. Photos and pictures also do not warrant a specific layout or functionality. Their use in whatever form is subject to prior approval by Eaton. The same applies to Trademarks (especially Eaton, Moeller, and Cutler-Hammer). The Terms and Conditions of Eaton apply, as referenced on Eaton Internet pages and Eaton order confirmations.

Eaton is a registered trademark.

All other trademarks are property of their respective owners.

Follow us on social media to get the latest product and support information.