Instruction Leaflet **IL01301050E**

Supersedes June 2016
Effective January 2019

Power Defense – ICCB
Series NRX
IZMX

Castell key lock accessory

Instructions apply to:

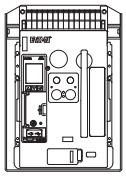

UL489 : **PD-NF, Series NRX NF**
IEC : **PD-NF, IZMX16**
UL1066/ANSI : **Series NRX NF**

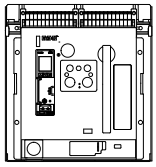

UL489 : **PD-RF**
IEC : **PD-RF, IZMX40**

⚠ WARNING

(1) ONLY QUALIFIED ELECTRICAL PERSONNEL SHOULD BE PERMITTED TO WORK ON THE EQUIPMENT.
(2) ALWAYS DE-ENERGIZE PRIMARY AND SECONDARY CIRCUITS IF A CIRCUIT BREAKER CANNOT BE REMOVED TO A SAFE WORK LOCATION.
(3) DRAWOUT CIRCUIT BREAKERS SHOULD BE LEVERED (RACKED) OUT TO THE DISCONNECT POSITION.
(4) ALL CIRCUIT BREAKERS SHOULD BE SWITCHED TO THE OFF POSITION AND MECHANISM SPRINGS DISCHARGED.
FAILURE TO FOLLOW THESE STEPS FOR ALL PROCEDURES DESCRIBED IN THIS INSTRUCTION LEAFLET COULD RESULT IN DEATH, BODILY INJURY, OR PROPERTY DAMAGE.

⚠ WARNING

THE INSTRUCTIONS CONTAINED IN THIS IL AND ON PRODUCT LABELS HAVE TO BE FOLLOWED. OBSERVE THE FIVE SAFETY RULES:
- **DISCONNECTING**
- **ENSURE THAT DEVICES CANNOT BE ACCIDENTALLY RESTARTED**
- **VERIFY ISOLATION FROM THE SUPPLY**
- **EARTHING AND SHORT-CIRCUITING**
- **COVERING OR PROVIDING BARRIERS TO ADJACENT LIVE PARTS**

DISCONNECT THE EQUIPMENT FROM THE SUPPLY. USE ONLY AUTHORIZED SPARE PARTS IN THE REPAIR OF THE EQUIPMENT. THE SPECIFIED MAINTENANCE INTERVALS AS WELL AS THE INSTRUCTIONS FOR REPAIR AND EXCHANGE MUST BE STRICTLY ADHERED TO PREVENT INJURY TO PERSONNEL AND DAMAGE TO THE SWITCHBOARD.

Power Defense™

Powering Business Worldwide

Note: The content of this IL applies to both PXR and Digitrip equipped breakers. Appearance of product may vary.

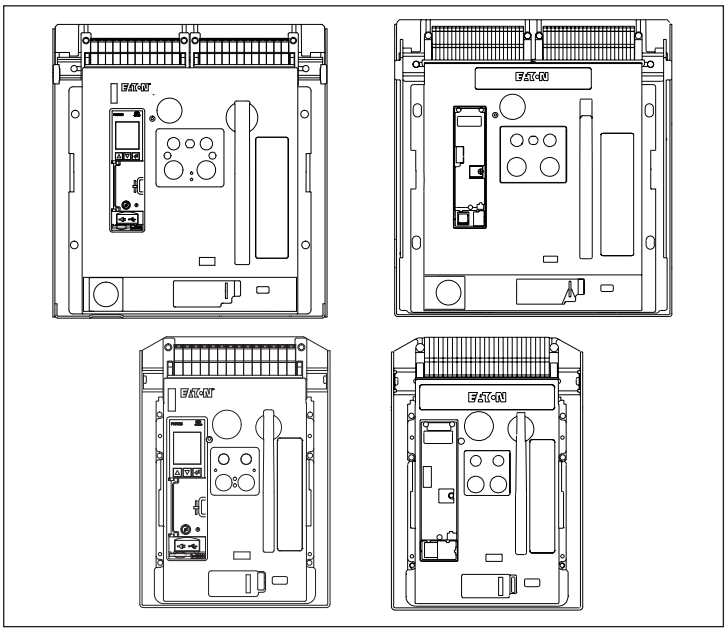

Section 1: General information

The key interlock secures the breaker in the "OFF" position. It is mounted in the upper portion of the breaker and can be viewed from the front cover. The customer supplies the keylock. The following safety features are provided:

1. With NO Key, the breaker is "OPEN" and cannot close.
2. With the Key ON (key in the cylinder) and rotated, the breaker is fully functional.
3. The key cannot be removed when the breaker is ON (closed).

Note: To remove the key, press the breaker "OFF" button, and rotate the key 90 degrees counterclockwise.

Kit parts identification

Refer to Figure 1 for visual identification of the parts listed below.

(A) External protective ring (self-adhesive) (1)

(B) Castell Key #FKW6-NI (not supplied) (letter or symbol required)

(C) Castell cylinder #CL1019 (not supplied) (specify "modified to 90°" and letter or symbol required)

(D) Metal mounting bracket (1)

(E) M3 x 5 mm mounting screw (2)

(F) Fiber retaining washer (2)

(G) Cylinder mounting screw (2) (not supplied)

(H) Lever assembly mounting nut (1)

(I) Lever assembly mounting screw(1)

(J) Lever assembly (1)

(K) Button support (1)

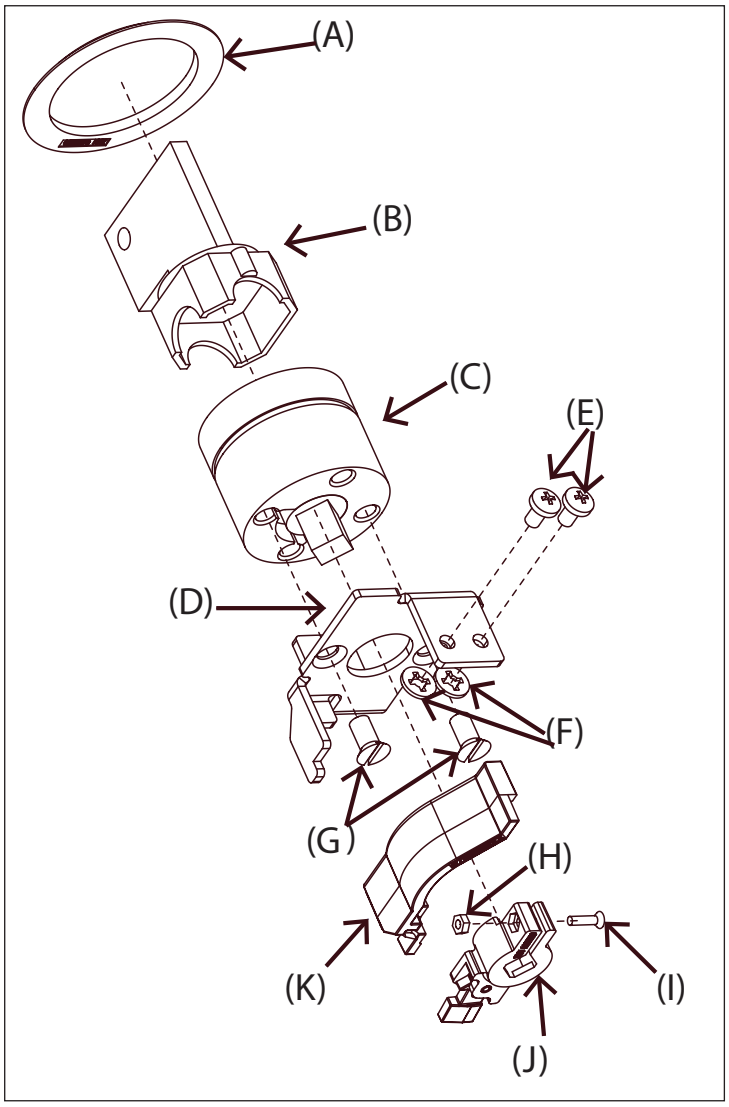

Figure 1. Contents of kit.

Section 2: Installation of key interlock

Proceed with the following 10 steps.

Step 1: Remove the four screws (six for 4-pole breaker) holding the front cover in place (two on each side of the cover).

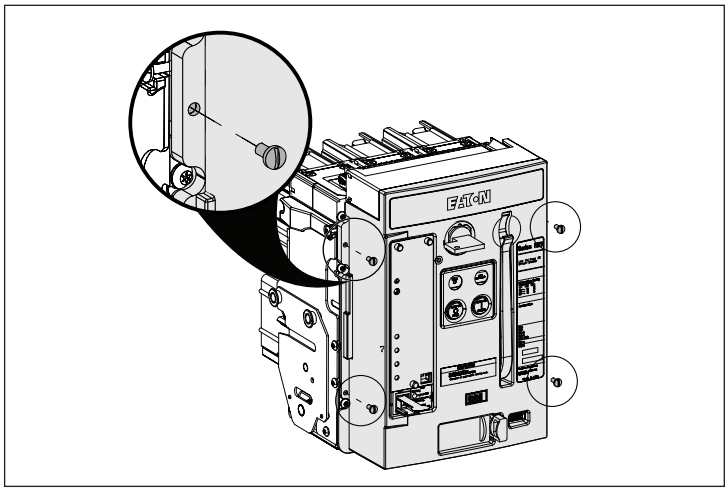

Figure 2. Step 1. NF frame.

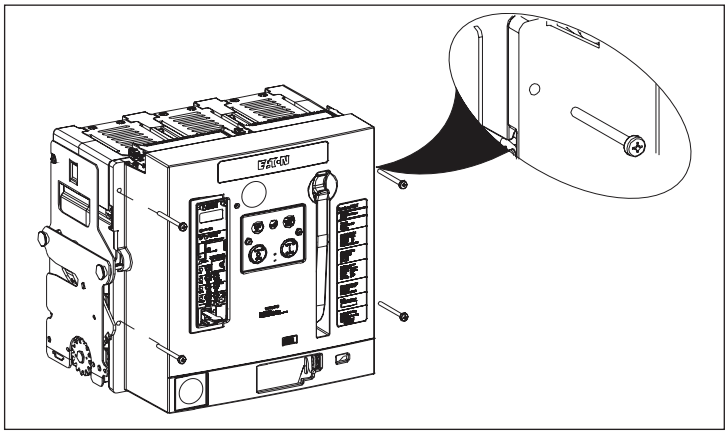

Figure 2a. Step 1. RF frame.

Step 2: Remove the front cover. Pull down on the charging handle to simplify removal.

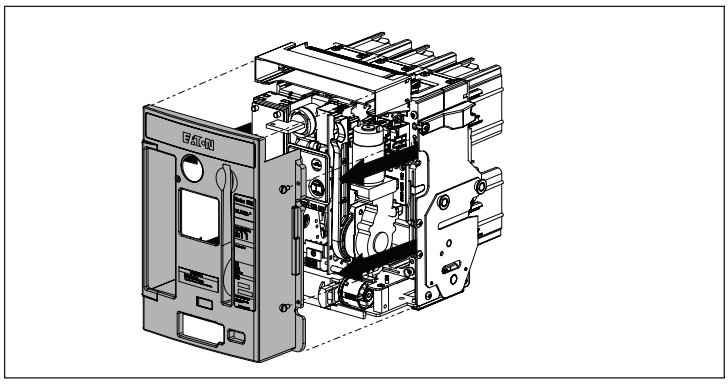

Figure 3. Step 2. NF frame.

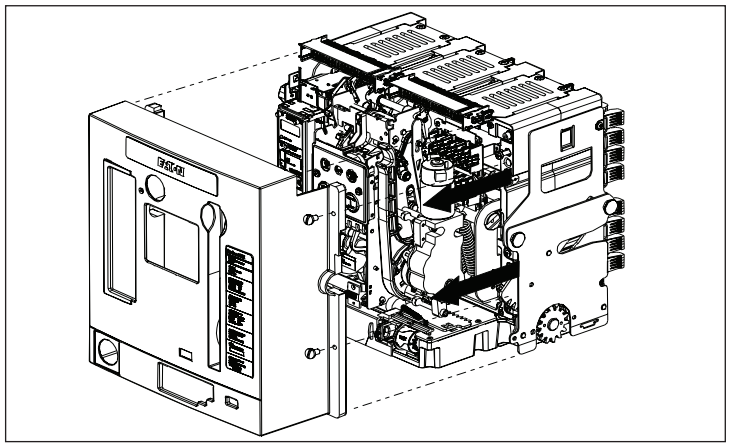

Figure 3a. Step 2. RF frame.

Step 3 (NF frame only): If this is a fixed circuit breaker, skip this step and proceed directly to Step 4. If this is a drawout circuit breaker, unscrew the three captive screws holding the secondary mounting bracket in place. This will permit the secondary mounting bracket to be moved down, providing access to the key interlock assembly's threaded mounting holes. No wires or connectors need to be removed or unplugged.

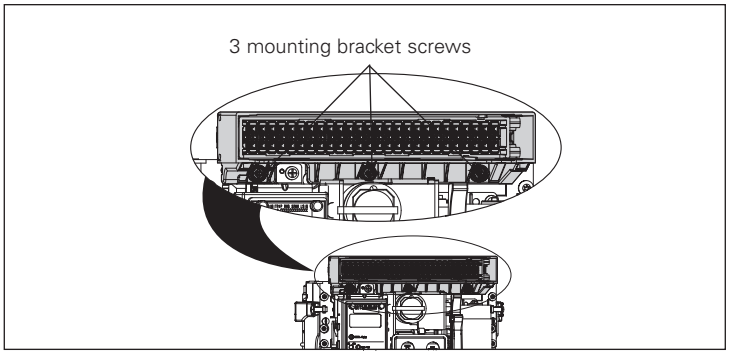

Figure 4. Step 3.

Step 4: Refer to Figure 1 for orientation purposes. Remove the key (B) from the cylinder (C), then remove the two mounting screws (G) from the back of the cylinder. Attach the metal mounting bracket (D) to the back of the cylinder using the mounting screws just removed. Note that the embossed letter or symbol on the cylinder should be in vertical orientation and point toward the two bracket mounting screws.

Step 5: The lever assembly (J) can now be attached to the square shaped shaft on the back of the cylinder (C). It is secured to the square shaped shaft by a mounting screw (I) and mounting nut (H). Usually the lever assembly comes with the mounting screw and nut already installed. If this is not the case, install the screw through one side and the nut on the opposite side in a recessed hole made to accommodate the nut. Push the lever assembly onto the shaft until it touches the mounting bracket tab. Make sure the lever assembly is straight when being installed onto the shaft. Once installed, firmly tighten the mounting screw (I) into the nut (H).

Step 6: Install the button support (K) by sliding it over the mounting plate (D). Ensure the grooves are seated against the mounting plate on top and bottom.

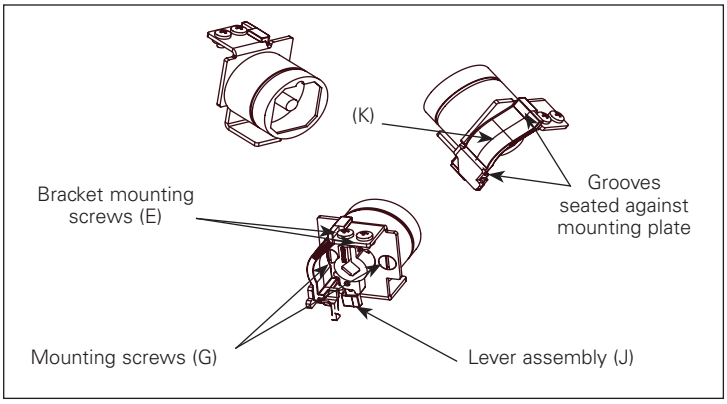

Figure 5. Steps 4 and 5.

Step 7: Identify the mounting location for the key lock assembly. Two threaded mounting holes are provided in the mounting tab to accommodate the two mounting screws (E) and two fiber retaining washers (F), which serve as spring washers when tightened. Make sure the key (B) is removed before mounting the assembly. Position the key lock assembly and tighten the two mounting screws. Make sure the mounting bracket's sheet metal tab is positioned under the plastic of the pushbutton plate. Use a small flat screwdriver to get the metal tab under the plastic.

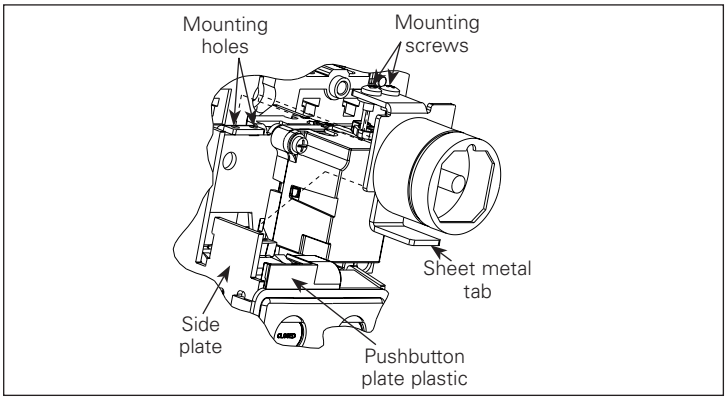

Figure 6. Step 7. NF frame.

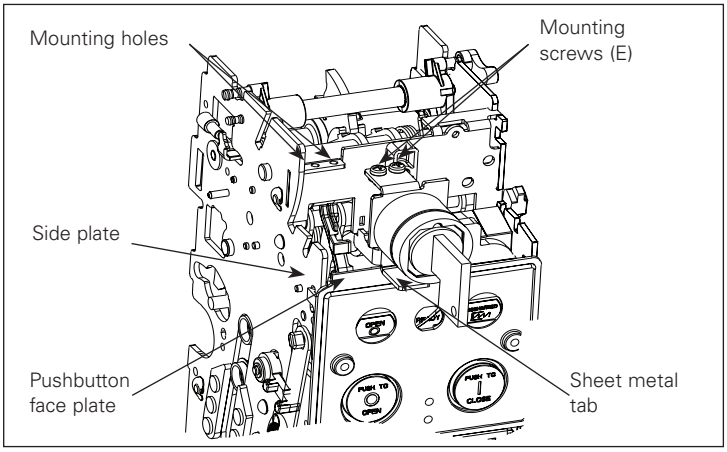

Figure 6a. Step 7. RF frame.

Step 8 (NF frame only): If this is a fixed circuit breaker, skip this step and proceed to Step 9. If this is a drawout circuit breaker, put back and re-tighten the three captive secondary mounting bracket screws previously removed in Step 3 of this section. Start with the center screw.

Note: If any connectors were accidentally loosened, ensure they are pushed back into place.

Step 9: With the key lock assembly now installed, place the front cover previously removed in Step 2 on an appropriate work surface front side up. Put a rigid support under the round knockout window. Using a small punch and a hammer, carefully punch out the round window in the upper center portion of the front cover. If necessary, use a small file to remove any burrs from the window. Make certain that all pieces and/or particles are cleaned up and removed before proceeding.

Step 10: Replace the front cover, and secure it in place with the mounting screws previously removed in Step 1. Remove the adhesive backing from the external protective ring (A), and press it onto the front cover over the key lock.

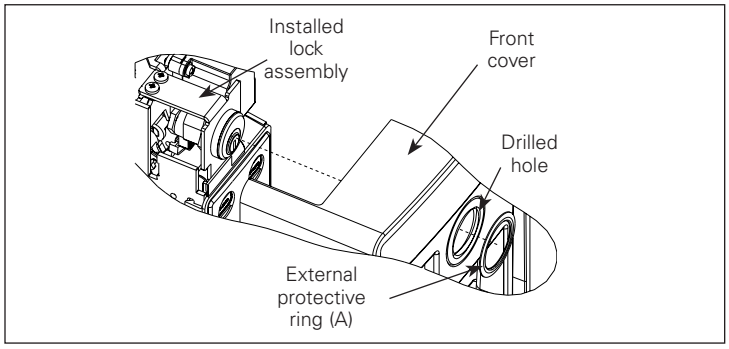

Figure 7. Step 10.

Step 11: Perform a functional test:

1. With the key in the cylinder, press the red "Push To Open" button down and rotate the key counterclockwise. The key must be pushed in to turn. Remove the key. Charge the breaker.
2. Push the green "Push to Close" button. The breaker should not close.
3. Insert the key and rotate 90° clockwise. Press the green button to close. The breaker should close.

Section 3: Removal of key interlock

To remove the key interlock, perform Steps 1 and 2 of Section 2. Complete the removal process by reversing the process as described in Steps 4 through 7 of Section 2. Replace the front cover.

Disclaimer of warranties and limitation of liability

The information, recommendations, descriptions, and safety notations in this document are based on Eaton's experience and judgment, and may not cover all contingencies. If further information is required, an Eaton sales office should be consulted.

Sale of the product shown in this literature is subject to the terms and conditions outlined in appropriate Eaton selling policies or other contractual agreement between Eaton and the purchaser.

THERE ARE NO UNDERSTANDINGS, AGREEMENTS, WARRANTIES, EXPRESSED OR IMPLIED, INCLUDING WARRANTIES OF FITNESS FOR A PARTICULAR PURPOSE OR MERCHANTABILITY, OTHER THAN THOSE SPECIFICALLY SET OUT IN ANY EXISTING CONTRACT BETWEEN THE PARTIES. ANY SUCH CONTRACT STATES THE ENTIRE OBLIGATION OF EATON. THE CONTENTS OF THIS DOCUMENT SHALL NOT BECOME PART OF OR MODIFY ANY CONTRACT BETWEEN THE PARTIES.

In no event will Eaton be responsible to the purchaser or user in contract, in tort (including negligence), strict liability, or otherwise for any special, indirect, incidental, or consequential damage or loss whatsoever, including but not limited to damage or loss of use of equipment, plant or power system, cost of capital, loss of power, additional expenses in the use of existing power facilities, or claims against the purchaser or user by its customers resulting from the use of the information, recommendations, and descriptions contained herein.

The information contained in this manual is subject to change without notice.

Eaton
Electrical Sector
1000 Eaton Boulevard
Cleveland, OH 44122
United States
877-ETN-CARE (877-386-2273)
Eaton.com

© 2019 Eaton
All Rights Reserved
Printed in USA
Publication No. IL01301050E/LNT18
Part No. IL01301050EH04
January 2019

Powering Business Worldwide

Eaton is a registered trademark.

All other trademarks are property of their respective owners.